6721825872
(2020/09) db

Air Flux IDU-1

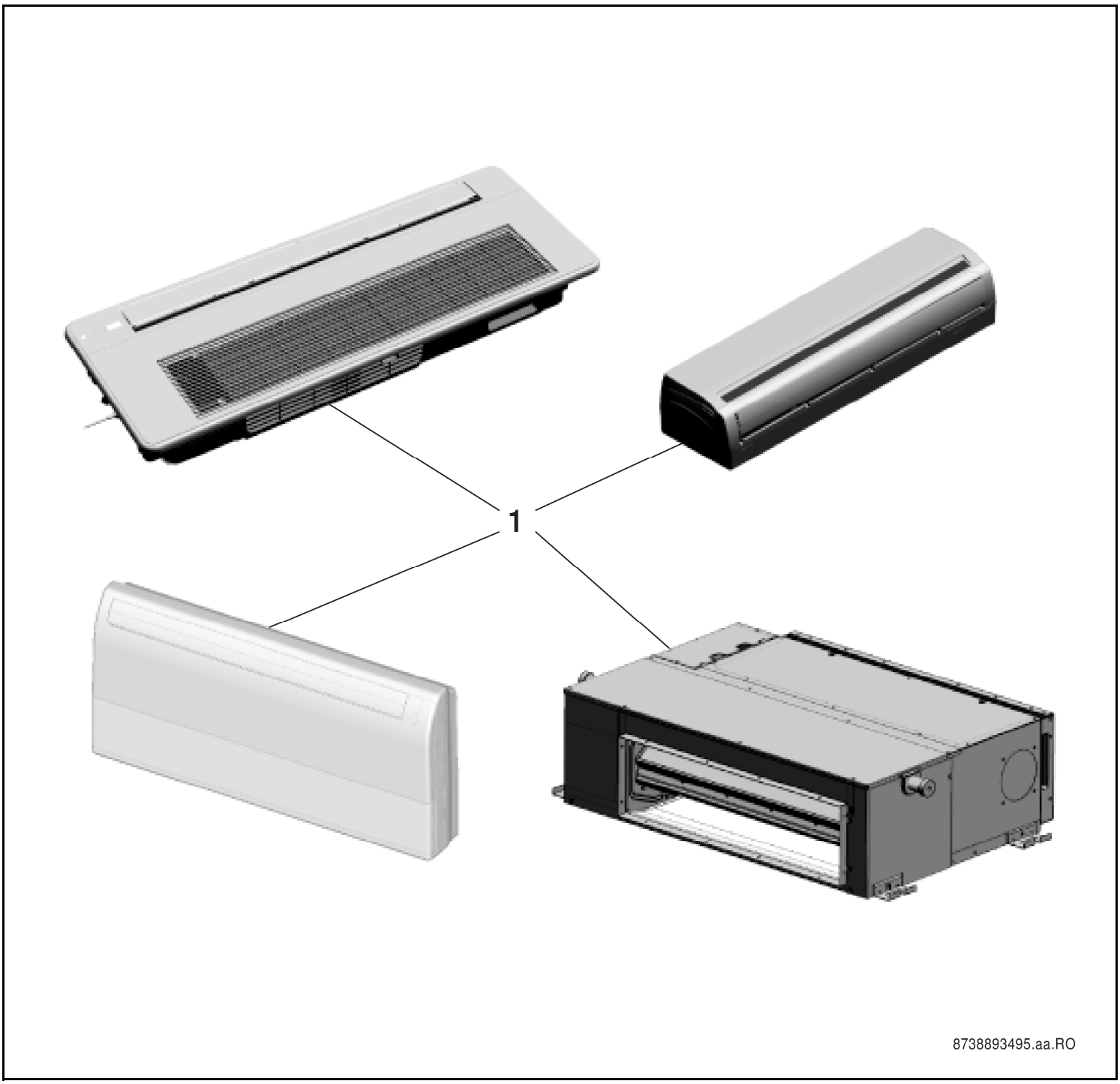

Table of contents

AF-1C 18-1 P	7 733 700 923	6
AF-1C 22-1 P	7 733 700 924	6
AF-1C 28-1 P	7 733 700 925	6
AF-1C 36-1 P	7 733 700 926	6
AF-1C 45-1 P	7 733 700 927	8
AF-1C 56-1 P	7 733 700 928	8
AF-1C 71-1 P	7 733 700 929	10
AF-2C 22-1 P	7 733 700 930	12
AF-2C 28-1 P	7 733 700 931	12
AF-2C 36-1 P	7 733 700 932	12
AF-2C 45-1 P	7 733 700 933	12
AF-2C 56-1 P	7 733 700 934	12
AF-2C 71-1 P	7 733 700 935	12
AF-4C 28-1 P	7 733 700 897	18
AF-4C 36-1 P	7 733 700 898	18
AF-4C 45-1 P	7 733 700 899	18
AF-4C 56-1 P	7 733 700 900	18
AF-4C 71-1 P	7 733 700 901	18
AF-4C 80-1 P	7 733 700 902	18
AF-4C 100-1 P	7 733 700 904	22
AF-4C 112-1 P	7 733 700 905	22
AF-4C 140-1 P	7 733 700 906	22
AF-4C 90-1 P	7 733 700 903	22
AF-4CC 22-1 P	7 733 700 892	24
AF-4CC 28-1 P	7 733 700 893	24
AF-4CC 36-1 P	7 733 700 894	26
AF-4CC 45-1 P	7 733 700 895	26
AF-4CR 28-1 P	7 733 700 907	28
AF-4CR 36-1 P	7 733 700 908	28
AF-4CR 45-1 P	7 733 700 909	28
AF-4CR 56-1 P	7 733 700 910	28
AF-4CR 71-1 P	7 733 700 911	28
AF-4CR 80-1 P	7 733 700 912	28
AF-4CR 100-1 P	7 733 700 914	32
AF-4CR 112-1 P	7 733 700 915	32
AF-4CR 140-1 P	7 733 700 916	32
AF-4CR 90-1 P	7 733 700 913	32
AF-CF 36-1	7 733 701 489	36
AF-CF 45-1	7 733 701 490	36
AF-CF 56-1	7 733 701 491	36
AF-CF 71-1	7 733 701 492	36
AF-CF 80-1	7 733 701 493	40
AF-CF 90-1	7 733 701 494	40
AF-CF 112-1	7 733 701 495	44
AF-CF 140-1	7 733 701 496	44
AF-DH 71-1	7 733 700 947	46
AF-DH 80-1	7 733 700 948	46
AF-DH 90-1	7 733 700 949	48
AF-DH 112-1	7 733 700 950	48
AF-DH 140-1	7 733 700 951	50
AF-DH 160-1	7 733 700 952	50
AF-DH 200-1	7 733 700 953	52
AF-DH 250-1	7 733 700 954	52
AF-DH 280-1	7 733 700 955	52

Table of contents

AF-DH 400-1	7 733 700 956	54
AF-DH 450-1	7 733 700 957	56
AF-DH 560-1	7 733 700 958	58
AF-DHS 22-1 P	7 733 700 959	60
AF-DHS 28-1 P	7 733 700 960	62
AF-DHS 36-1 P	7 733 700 961	64
AF-DHS 45-1 P	7 733 700 962	66
AF-DHS 56-1 P	7 733 700 963	68
AF-DHS 71-1 P	7 733 700 964	70
AF-DL 22-1 P	7 733 700 937	72
AF-DL 28-1 P	7 733 700 938	72
AF-DL 36-1 P	7 733 700 939	72
AF-DL 45-1 P	7 733 700 940	74
AF-DL 56-1 P	7 733 700 941	74
AF-DL 71-1 P	7 733 700 942	76
AF-DM 80-1 P	7 733 700 943	78
AF-DM 90-1 P	7 733 700 944	78
AF-DM 112-1 P	7 733 700 945	78
AF-DM 140-1 P	7 733 700 946	80
AF-F 22-1	7 733 700 984	84
AF-F 28-1	7 733 700 985	84
AF-F 36-1	7 733 700 986	86
AF-F 45-1	7 733 700 987	86
AF-F 56-1	7 733 700 988	88
AF-F 71-1	7 733 700 989	88
AF-F 80-1	7 733 700 990	90
AF-FC 22-1	7 733 700 977	92
AF-FC 28-1	7 733 700 978	92
AF-FC 36-1	7 733 700 979	94
AF-FC 45-1	7 733 700 980	94
AF-FC 56-1	7 733 700 981	96
AF-FC 71-1	7 733 700 982	96
AF-FC 80-1	7 733 700 983	98
AF-W 17-1	7 733 701 480	100
AF-W 22-1	7 733 701 481	102
AF-W 28-1	7 733 701 482	104
AF-W 36-1	7 733 701 483	106
AF-W 45-1	7 733 701 484	108
AF-W 56-1	7 733 701 485	108
AF-W 71-1	7 733 701 486	110
AF-W 80-1	7 733 701 487	110
AF-W 90-1	7 733 701 488	110

Spare parts list

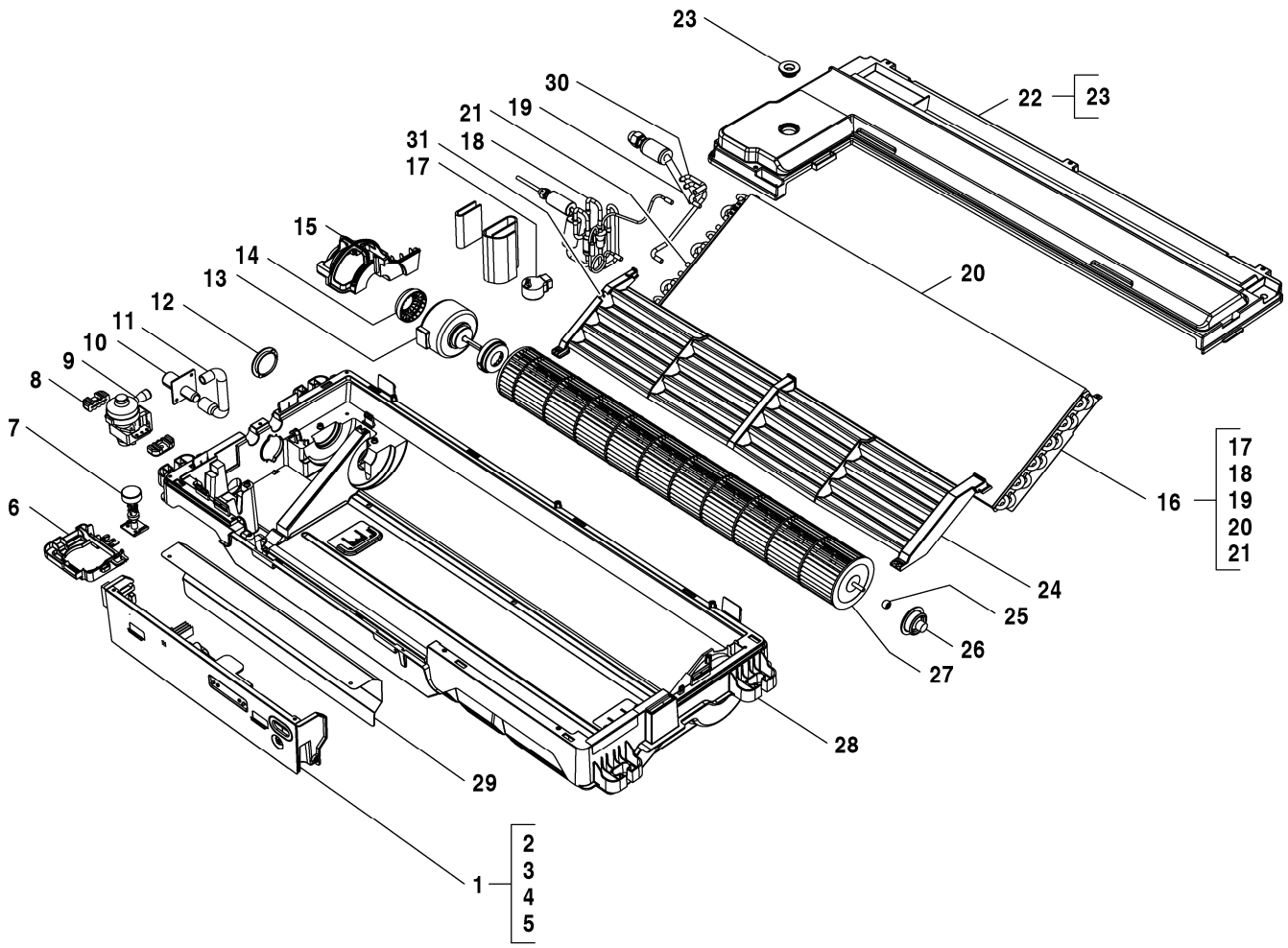

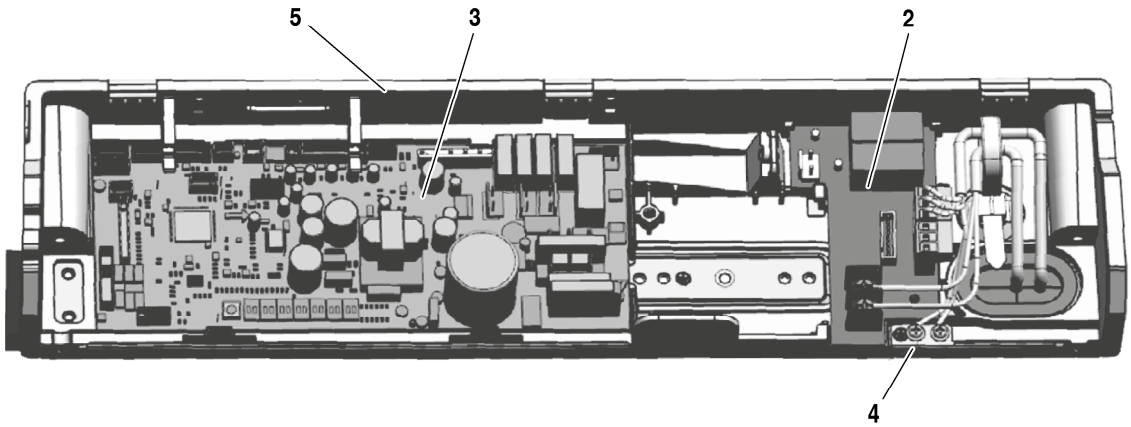

8738894831.aa.RO

AF-1C 18-1 P	7 733 700 923
AF-1C 22-1 P	7 733 700 924
AF-1C 28-1 P	7 733 700 925
AF-1C 36-1 P	7 733 700 926

Pos	Description	Ordering no.	1C 18-1 P	1C 22-1 P	1C 28-1 P	1C 36-1 P												Remarks
1	E-part box with electronic components	8 733 501 382	■	■	■	■												
2	Wiring converter	7 739 831 431	■	■	■	■												
3	AF1C-1 main board	8 750 501 475	■	■	■	■												
4	E-part box housing	8 733 501 369	■	■	■	■												
5	E-part box housing	8 733 501 371	■	■	■	■												
6	Bracket of drainage pump	7 739 831 435	■	■	■	■												
7	Water level switch	7 739 831 436	■	■	■	■												
8	Anti-vibration pad of drainage pump	7 739 831 437	■	■	■	■												
9	Drainage pump	8 733 501 346	■	■	■	■												
10	Drainage pipe	7 739 831 315	■	■	■	■												
11	Drainage pipe	7 739 831 439	■	■	■	■												
12	Cover of water testing hole	7 739 831 440	■	■	■	■												
13	Brushless DC motor	8 733 501 249	■	■	■	■												
14	Bracket of motor	8 733 501 239	■	■	■	■												
15	Bracket of motor	7 739 831 443	■	■	■	■												
16	Evaporator assembly	8 733 501 451			■	■												
16	Evaporator assembly	8 733 501 453	■	■														
17	EXV valve coil	8 733 501 509	■	■	■	■												
18	Evaporator inlet pipe assembly	8 733 501 462			■	■												
18	Evaporator inlet pipe assembly	8 733 501 463	■	■														
19	Evaporator outlet pipe assembly	8 733 501 487			■	■												
19	Evaporator outlet pipe assembly	8 733 501 488	■	■														
20	Evaporator assembly	8 733 501 408			■	■												
20	Evaporator assembly	8 733 501 409	■	■														
21	Pipe temperature sensor	8 733 501 625	■	■	■	■												
22	Drainage water pan	7 739 831 452	■	■	■	■												
23	Water pipe plug	7 739 831 467	■	■	■	■												
24	Drainage water pan	7 739 831 454	■	■	■	■												
25	Bearing	7 739 831 455	■	■	■	■												
26	Bearing base	7 739 831 456	■	■	■	■												
27	Cross flow fan	7 739 831 457	■	■	■	■												
28	Chassis assembly	7 739 831 458	■	■	■	■												
29	Cover of E-part box	7 739 831 459	■	■	■	■												
30	Pipe temperature sensor	8 733 501 624	■	■	■	■												
31	Room temperature sensor	8 733 501 656	■	■	■	■												
	CCB (400mm, SELV adapter)	8 750 501 441	■	■	■	■												
	Connection cable AF-1C 22-36	8 750 501 443	■	■	■	■												

AF-1C 18-1 P	7 733 700 923
AF-1C 22-1 P	7 733 700 924
AF-1C 28-1 P	7 733 700 925
AF-1C 36-1 P	7 733 700 926

Spare parts list

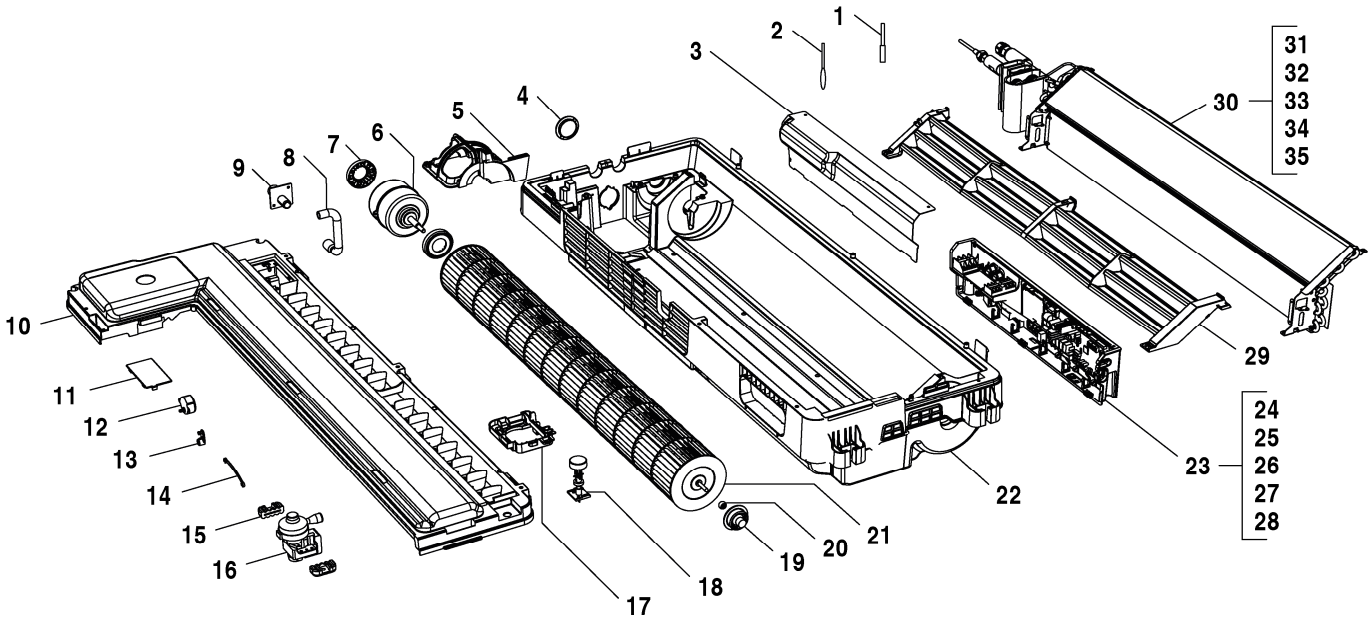

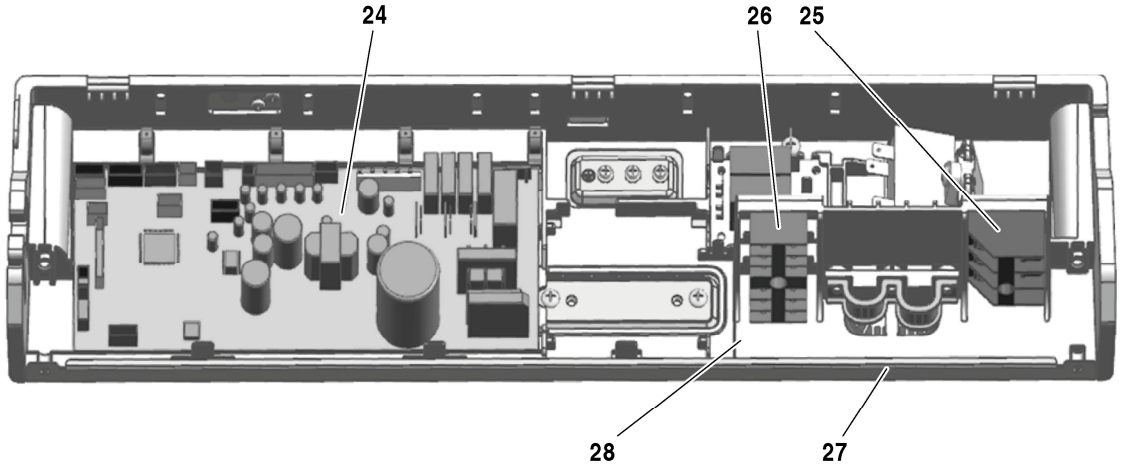

8738894832.aa.RO

AF-1C 45-1 P	7 733 700 927
AF-1C 56-1 P	7 733 700 928

Pos	Description	Ordering no.	1C 45-1 P	1C 56-1 P															Remarks
1	Pipe temperature sensor	8 733 501 624	■	■															
2	Room temperature sensor	8 733 501 656	■	■															
3	Cover of E-part box	7 739 831 468	■	■															
4	Cover of water testing hole	7 739 831 440	■	■															
5	Bracket of motor	7 739 831 469	■	■															
6	Brushless DC motor	8 733 501 241	■	■															
7	Bracket of motor	8 733 501 238	■	■															
8	Drainage pipe	7 739 831 439	■	■															
9	Drainage pipe	7 739 831 315	■	■															
10	Drainage water pan	7 739 831 472	■	■															
11	Cover	7 739 831 473	■	■															
12	Step motor	8 733 501 687	■	■															
13	Crankshaft	7 739 831 475	■	■															
14	Connecting rod	7 739 831 476	■	■															
15	Anti-vibration pad of drainage pump	7 739 831 437	■	■															
16	Drainage pump	8 733 501 346	■	■															
17	Bracket of drainage pump	7 739 831 435	■	■															
18	Water level switch	7 739 831 436	■	■															
19	Bearing base	7 739 831 456	■	■															
20	Bearing	7 739 831 455	■	■															
21	Cross flow fan	7 739 831 477	■	■															
22	Chassis assembly	7 739 831 478	■	■															
23	E-part box with electronic components	8 733 501 383	■	■															
24	AF1C-1 main board	8 750 501 475	■	■															
25	Wiring terminal	7 739 831 483	■	■															
26	Wiring terminal	8 733 501 716	■	■															
27	E-part box housing	8 733 501 372	■	■															
28	E-part box housing	7 739 831 486	■	■															
29	Drainage water pan	7 739 831 487	■	■															
30	Evaporator assembly	8 733 501 454	■																
30	Evaporator assembly	8 733 501 455		■															
31	Evaporator inlet pipe assembly	8 733 501 465	■																
31	Evaporator inlet pipe assembly	8 733 501 468		■															
32	Evaporator inlet pipe assembly	8 733 501 464	■																
32	Evaporator inlet pipe assembly	8 733 501 467		■															
33	EXV valve body	7 739 831 491	■	■															
34	EXV valve coil	8 733 501 509	■	■															
35	Pipe temperature sensor	8 733 501 625	■	■															
	CCB (400mm, SELV adapter)	8 750 501 441	■	■															
	Connection cable AF-1C 45-71	8 750 501 447	■	■															

AF-1C 45-1 P 7 733 700 927

AF-1C 56-1 P 7 733 700 928

Spare parts list

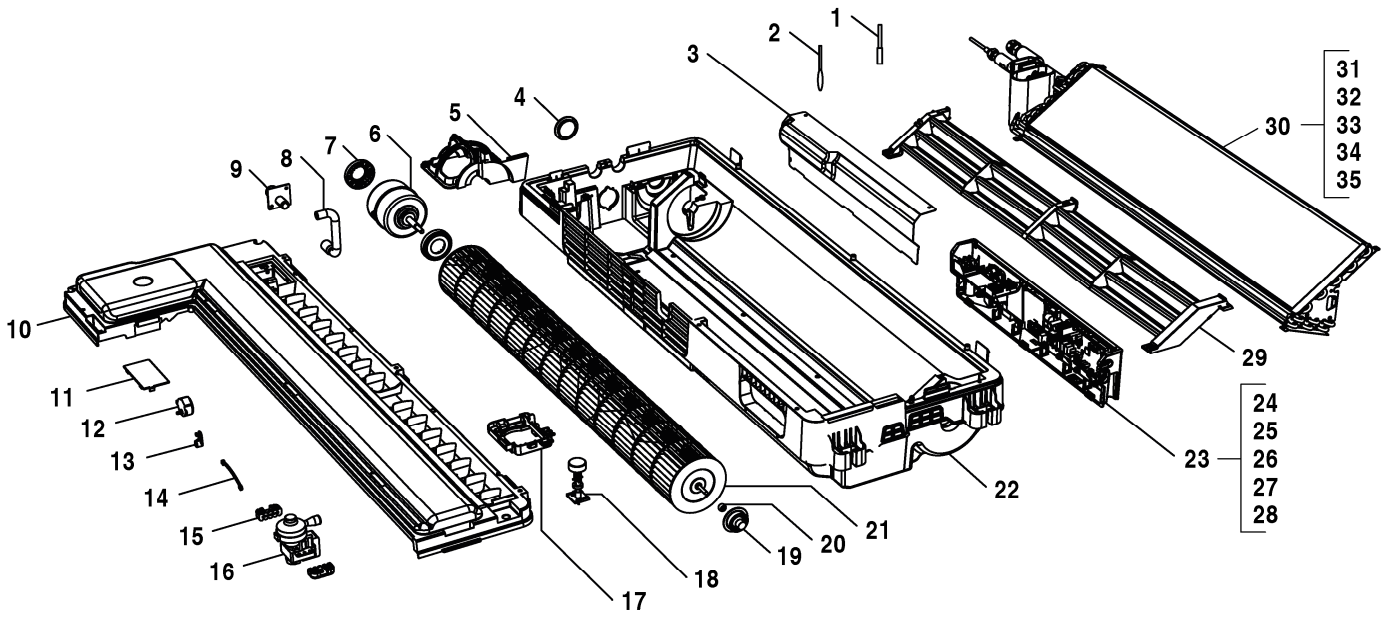

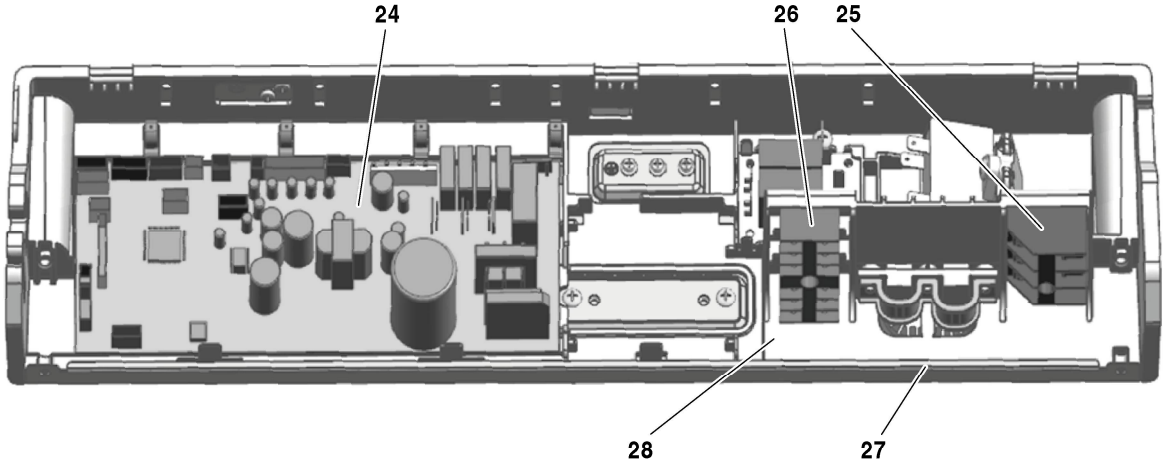

8738894833.aa.RO

AF-1C 71-1 P 7 733 700 929

Pos	Description	Ordering no.	1C 71-1 P																	Remarks
1	Pipe temperature sensor	8 733 501 624	■																	
2	Room temperature sensor	8 733 501 656	■																	
3	Cover of E-part box	7 739 831 468	■																	
4	Cover of water testing hole	7 739 831 440	■																	
5	Bracket of motor	7 739 831 469	■																	
6	Brushless DC motor	8 733 501 241	■																	
7	Bracket of motor	8 733 501 238	■																	
8	Drainage pipe	7 739 831 439	■																	
9	Drainage pipe	7 739 831 315	■																	
10	Drainage water pan	7 739 831 472	■																	
11	Cover	7 739 831 473	■																	
12	Step motor	8 733 501 687	■																	
13	Crankshaft	7 739 831 475	■																	
14	Connecting rod	7 739 831 476	■																	
15	Anti-vibration pad of drainage pump	7 739 831 437	■																	
16	Drainage pump	8 733 501 346	■																	
17	Bracket of drainage pump	7 739 831 435	■																	
18	Water level switch	7 739 831 436	■																	
19	Bearing base	7 739 831 456	■																	
20	Bearing	7 739 831 455	■																	
21	Cross flow fan	7 739 831 477	■																	
22	Chassis assembly	7 739 831 478	■																	
23	E-part box with electronic components	8 733 501 383	■																	
24	AF1C-1 main board	8 750 501 475	■																	
25	Wiring terminal	7 739 831 483	■																	
26	Wiring terminal	8 733 501 716	■																	
27	E-part box housing	8 733 501 372	■																	
28	E-part box housing	7 739 831 486	■																	
29	Drainage water pan	7 739 831 487	■																	
30	Evaporator assembly	8 733 501 452	■																	
31	Evaporator inlet pipe assembly	8 733 501 466	■																	
32	Evaporator inlet pipe assembly	8 733 501 467	■																	
33	EXV valve body	7 739 831 491	■																	
34	EXV valve coil	8 733 501 509	■																	
35	Pipe temperature sensor	8 733 501 625	■																	
	CCB (400mm, SELV adapter)	8 750 501 441	■																	
	Connection cable AF-1C 45-71	8 750 501 447	■																	

Spare parts list

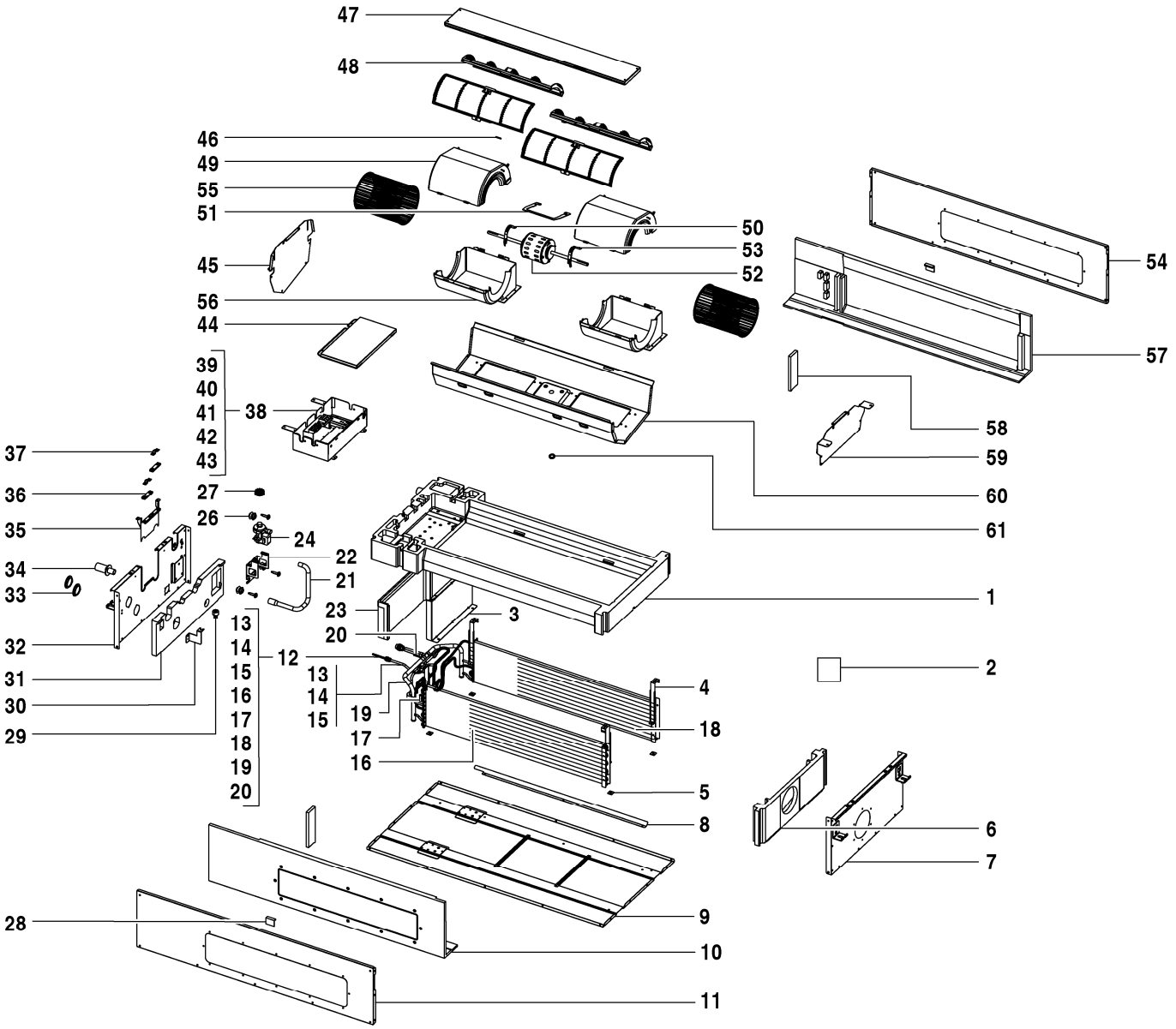

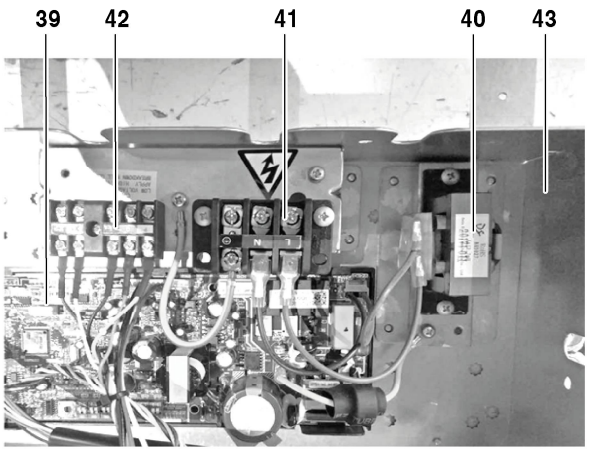

8738894837.aa.RO

AF-2C 22-1 P	7 733 700 930
AF-2C 28-1 P	7 733 700 931
AF-2C 36-1 P	7 733 700 932
AF-2C 45-1 P	7 733 700 933
AF-2C 56-1 P	7 733 700 934
AF-2C 71-1 P	7 733 700 935

Pos	Description	Ordering no.	2C 22-1 P	2C 28-1 P	2C 36-1 P	2C 45-1 P	2C 56-1 P	2C 71-1 P										Remarks
1	Drainage water pan	7 739 831 499	■	■	■	■	■	■										
2	Motor base	7 739 834 803	■	■	■	■	■	■										
3	Board assembly	7 739 831 500	■	■	■	■	■	■										
4	Mounting plate of evaporator	7 739 831 501	■	■	■	■	■	■										
5	Insulation pad	7 739 831 502	■	■	■	■	■	■										
6	Foam	8 733 501 529	■	■	■	■	■	■										
7	Side plate assembly	8 733 501 670	■	■	■	■	■	■										
8	Balance board	7 739 831 505	■	■	■	■	■	■										
9	Board assembly	7 739 831 506	■	■	■	■	■	■										
10	Foam	8 733 501 527	■	■	■	■	■	■										
11	Side plate assembly	8 733 501 669	■	■	■	■	■	■										
12	Evaporator assembly	8 733 501 441				■												
12	Evaporator assembly	8 733 501 442	■	■	■													
12	Evaporator assembly	8 733 501 443					■	■										
13	Evaporator inlet pipe assembly	8 733 501 469	■	■	■													
13	Evaporator inlet pipe assembly	8 733 501 470				■												
13	Evaporator inlet pipe assembly	8 733 501 471					■	■										
14	EXV valve body	7 739 831 511	■	■	■	■	■	■										
15	EXV valve coil	7 739 831 358	■	■	■	■	■	■										
16	Evaporator assembly	8 733 501 412				■	■	■										
16	Evaporator assembly	8 733 501 413	■	■	■													
17	Pipe temperature sensor	7 739 831 326	■	■	■	■	■	■										
18	Evaporator assembly	8 733 501 410				■	■	■										
18	Evaporator assembly	8 733 501 411	■	■	■													
19	Evaporator outlet pipe assembly	8 733 501 495	■	■	■													
19	Evaporator outlet pipe assembly	8 733 501 496				■												
19	Evaporator outlet pipe assembly	8 733 501 499					■	■										
20	Pipe temperature sensor	8 733 501 622	■	■	■	■	■	■										
21	Drainage pipe	7 739 831 516	■	■	■	■	■	■										
22	Mounting plate of drainage pump	7 739 831 517	■	■	■	■	■	■										
23	Foam	8 733 501 524	■	■	■	■	■	■										
24	Drainage pump	7 739 831 519	■	■	■	■	■	■										
26	Anti-block grille for water pump	7 739 836 359				■												
26	Rubber ring	8 733 501 661	■	■	■		■	■										
27	Anti-block grille for water pump	7 739 836 359	■	■	■		■	■										
27	Board assembly	8 733 501 235				■												
28	Water level switch	7 739 831 522				■												
28	Board assembly	8 733 501 235	■	■	■		■	■										
29	Water level switch	7 739 831 522	■	■	■		■	■										
29	Supporter	7 739 831 523				■												
30	Supporter	7 739 831 523	■	■	■		■	■										
30	Foam	8 733 501 526				■												
31	Foam	8 733 501 526	■	■	■		■	■										
31	Side plate assembly	8 733 501 671				■												
32	Cover of water testing hole	7 739 831 440				■												
32	Side plate assembly	8 733 501 671	■	■	■		■	■										
33	Drainage pipe	7 739 831 386				■												
33	Cover of water testing hole	7 739 831 440	■	■	■		■	■										
34	Drainage pipe	7 739 831 386	■	■	■		■	■										
34	Pipe clamp assembly	7 739 831 526				■												
35	Pipe clamp assembly	7 739 831 526	■	■	■		■	■										
35	Wiring plate	7 739 831 527				■												

AF-2C 22-1 P	7 733 700 930
AF-2C 28-1 P	7 733 700 931
AF-2C 36-1 P	7 733 700 932
AF-2C 45-1 P	7 733 700 933
AF-2C 56-1 P	7 733 700 934
AF-2C 71-1 P	7 733 700 935

Spare parts list

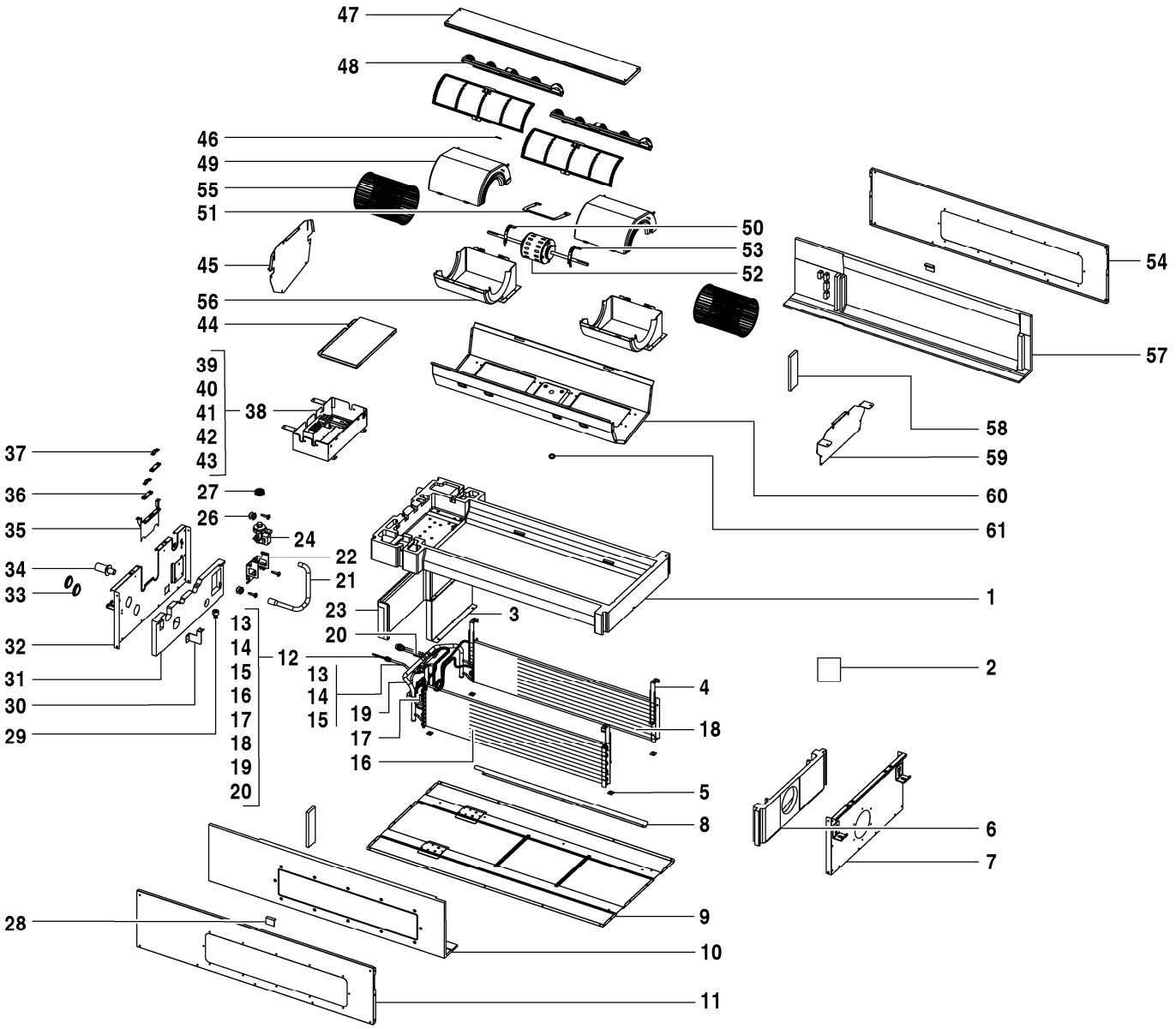

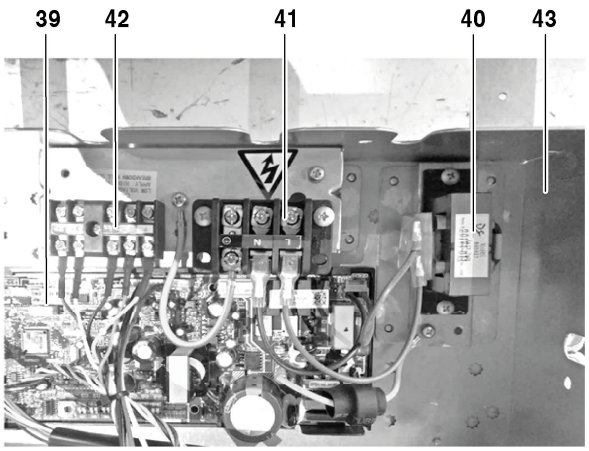

8738894837.aa.RO

AF-2C 22-1 P	7 733 700 930
AF-2C 28-1 P	7 733 700 931
AF-2C 36-1 P	7 733 700 932
AF-2C 45-1 P	7 733 700 933
AF-2C 56-1 P	7 733 700 934
AF-2C 71-1 P	7 733 700 935

Pos	Description	Ordering no.	2C 22-1 P	2C 28-1 P	2C 36-1 P	2C 45-1 P	2C 56-1 P	2C 71-1 P										Remarks
36	Wiring plate	7 739 831 527	■	■	■		■	■										
36	Cable clip	7 739 831 528				■												
37	Cable clip	7 739 831 528	■	■	■		■	■										
37	E-part box with electronic components	8 733 501 394				■												
38	E-part box with electronic components	8 733 501 394	■	■	■		■	■										
38	Indoor unit main PCB	8 733 501 550				■												
39	Indoor unit main PCB	8 733 501 550	■	■	■		■	■										
39	Reactor	8 733 501 650				■												
40	Wiring terminal	7 739 831 830				■												
40	Reactor	8 733 501 650	■	■	■		■	■										
41	Wiring terminal	7 739 831 830	■	■	■		■	■										
41	Wiring terminal	8 733 501 716				■												
42	E-part box housing	8 733 501 373				■												
42	Wiring terminal	8 733 501 716	■	■	■		■	■										
43	Cover of E-part box	8 733 501 319				■												
43	E-part box housing	8 733 501 373	■	■	■		■	■										
44	Board assembly	8 733 501 233				■												
44	Cover of E-part box	8 733 501 319	■	■	■		■	■										
45	Board assembly	8 733 501 233	■	■	■		■	■										
45	Room temperature sensor	8 733 501 657				■												
46	Board assembly	8 733 501 234				■												
46	Room temperature sensor	8 733 501 657	■	■	■		■	■										
47	Air filter	7 739 831 536				■												
47	Board assembly	8 733 501 234	■	■	■		■	■										
48	Air filter	7 739 831 536	■	■	■		■	■										
48	Shell of centrifugal fan, up	7 739 831 537				■												
49	Shell of centrifugal fan, up	7 739 831 537	■	■	■		■	■										
49	Cover of motor, left	7 739 831 538				■												
50	Cover of motor, left	7 739 831 538	■	■	■		■	■										
50	Board assembly	7 739 834 812				■												
51	Brushless DC motor	7 739 834 661				■												
51	Board assembly	7 739 834 812	■	■	■		■	■										
52	Cover of motor, right	7 739 831 541				■												
52	Brushless DC motor	7 739 834 661	■	■	■		■	■										
53	Cover of motor, right	7 739 831 541	■	■	■		■	■										
53	Side plate assembly	8 733 501 672				■												
54	Centrifugal fan	7 739 831 543				■												
54	Side plate assembly	8 733 501 672	■	■	■		■	■										
55	Centrifugal fan	7 739 831 543	■	■	■		■	■										
55	Shell of centrifugal fan, down	7 739 831 544				■												
56	Shell of centrifugal fan, down	7 739 831 544	■	■	■		■	■										
56	Foam	8 733 501 528				■												
57	Foam	8 733 501 525				■												
57	Foam	8 733 501 528	■	■	■		■	■										
58	Board assembly	8 733 501 232				■												
58	Foam	8 733 501 525	■	■	■		■	■										
59	Board assembly	8 733 501 232	■	■	■		■	■										
59	Board assembly	8 733 501 236				■												
60	Rubber ring	7 739 831 549				■												
60	Board assembly	8 733 501 236	■	■	■		■	■										
61	Rubber ring	7 739 831 549	■	■	■		■	■										
	CCB (400mm, SELV adapter)	8 750 501 441	■	■	■	■	■	■										

AF-2C 22-1 P	7 733 700 930
AF-2C 28-1 P	7 733 700 931
AF-2C 36-1 P	7 733 700 932
AF-2C 45-1 P	7 733 700 933
AF-2C 56-1 P	7 733 700 934
AF-2C 71-1 P	7 733 700 935

Spare parts list

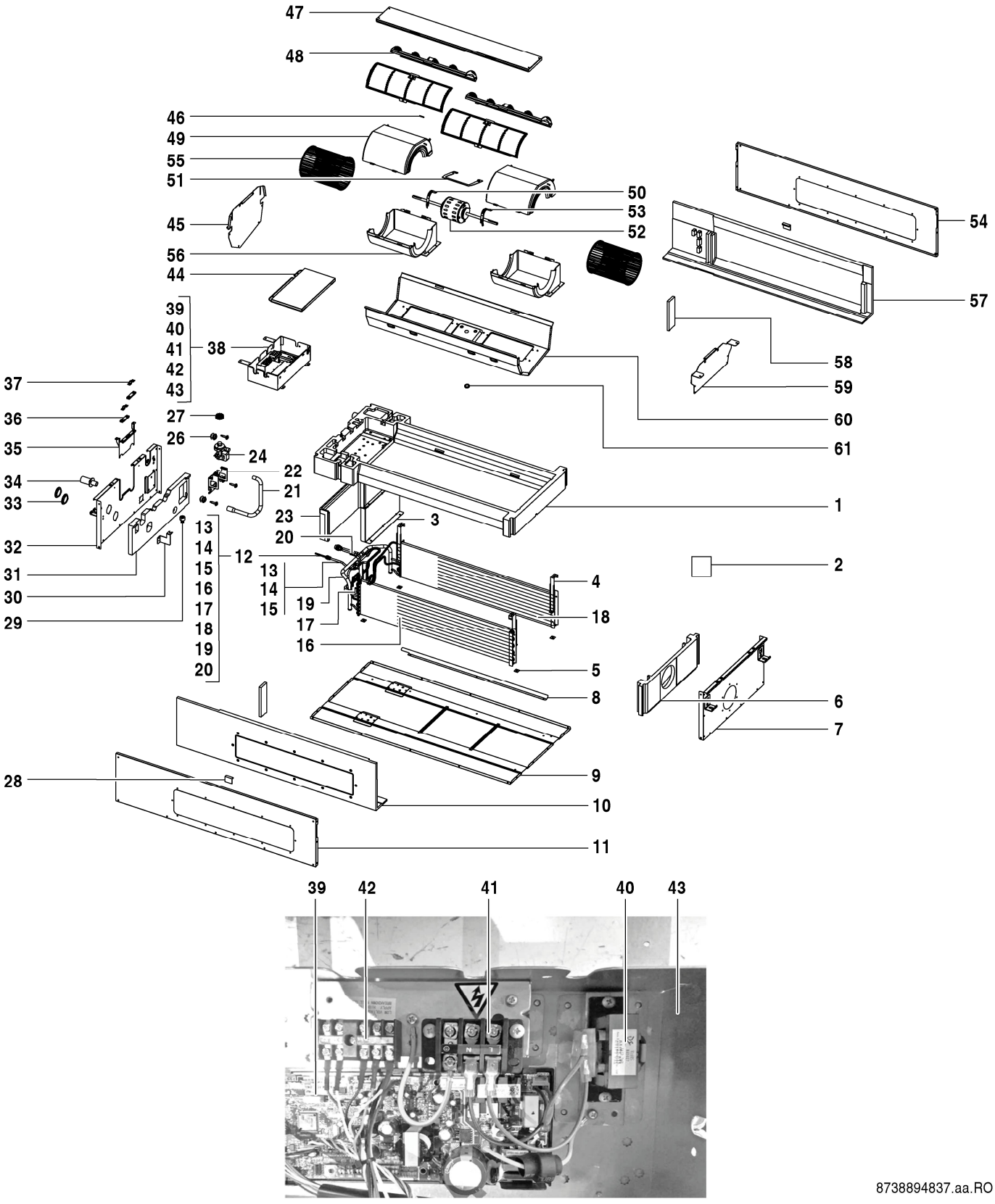

8738894837.aa.RO

AF-2C 22-1 P	7 733 700 930
AF-2C 28-1 P	7 733 700 931
AF-2C 36-1 P	7 733 700 932
AF-2C 45-1 P	7 733 700 933
AF-2C 56-1 P	7 733 700 934
AF-2C 71-1 P	7 733 700 935

Pos	Description	Ordering no.	2C 22-1 P	2C 28-1 P	2C 36-1 P	2C 45-1 P	2C 56-1 P	2C 71-1 P										Remarks
	Connection cable AF-IDU	8 750 501 446	■	■	■	■	■	■										

AF-2C 22-1 P	7 733 700 930
AF-2C 28-1 P	7 733 700 931
AF-2C 36-1 P	7 733 700 932
AF-2C 45-1 P	7 733 700 933
AF-2C 56-1 P	7 733 700 934
AF-2C 71-1 P	7 733 700 935

Spare parts list

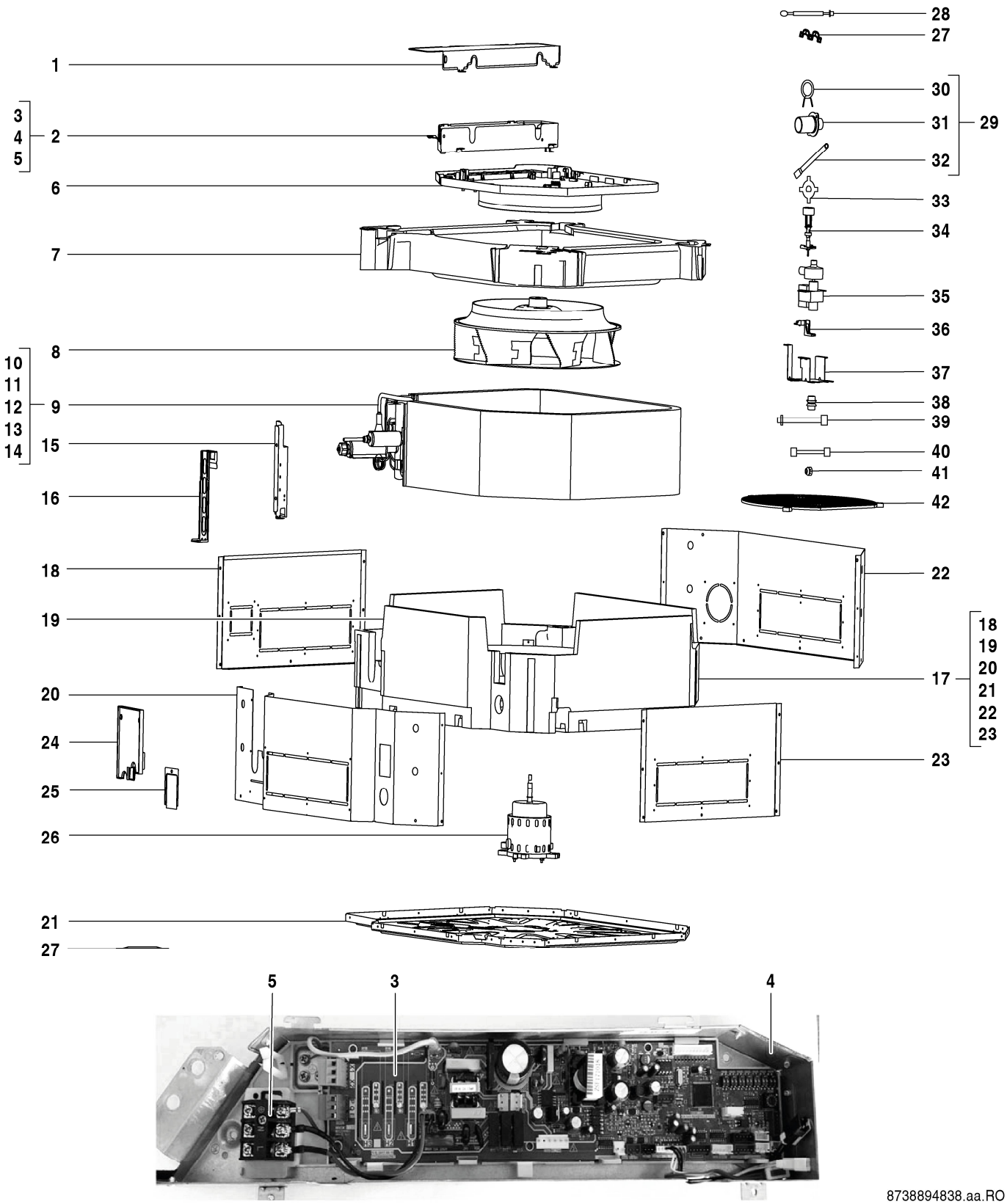

AF-4C 28-1 P	7 733 700 897
AF-4C 36-1 P	7 733 700 898
AF-4C 45-1 P	7 733 700 899
AF-4C 56-1 P	7 733 700 900
AF-4C 71-1 P	7 733 700 901
AF-4C 80-1 P	7 733 700 902

Pos	Description	Ordering no.	4C 28-1 P	4C 36-1 P	4C 45-1 P	4C 56-1 P	4C 71-1 P	4C 80-1 P										Remarks
1	Cover of E-part box	8 733 501 318	■	■	■	■	■	■										
2	E-part box with electronic components	8 733 501 385	■	■	■	■	■	■										
3	AF4C-1 main board	8 750 501 471	■	■	■	■	■	■										
4	E-part box housing	8 733 501 370	■	■	■	■	■	■										
5	Wiring terminal	7 739 831 350	■	■	■	■	■	■										
6	Air outlet guider	7 739 831 351	■	■	■	■	■	■										
7	Drainage water pan	8 733 501 348	■	■	■	■	■	■										
8	Centrifugal fan	7 739 831 353	■	■	■	■	■	■										
9	Evaporator assembly	8 733 501 446	■	■														
9	Evaporator assembly	8 733 501 448			■													
9	Evaporator assembly	8 733 501 450				■	■	■										
10	Evaporator assembly	8 733 501 415			■	■	■	■										
10	Evaporator assembly	8 733 501 416	■	■														
11	Evaporator inlet pipe assembly	8 733 501 475			■													
11	Evaporator inlet pipe assembly	8 733 501 476				■	■	■										
11	Evaporator inlet pipe assembly	8 733 501 477	■	■														
12	Evaporator outlet pipe assembly	7 739 836 225	■	■														
12	Evaporator outlet pipe assembly	8 733 501 490			■													
12	Evaporator outlet pipe assembly	8 733 501 494				■	■	■										
13	EXV valve coil	8 733 501 508	■	■	■	■	■	■										
14	Pipe temperature sensor	7 733 700 028	■	■	■	■	■	■										
15	Mounting plate of evaporator	7 739 831 361	■	■														
15	Mounting plate of evaporator	7 739 831 394			■	■	■	■										
16	Mounting plate of evaporator	7 739 831 362	■	■	■	■	■	■										
17	Chassis assembly	8 733 501 263	■	■	■	■	■	■										
18	Board assembly	7 739 831 363	■	■	■	■	■	■										
19	Foam	8 733 501 523	■	■	■	■	■	■										
20	Board assembly	7 739 831 365	■	■	■	■	■	■										
21	Chassis assembly	7 739 836 184	■	■	■	■	■	■										
22	Board assembly	7 739 831 384	■	■	■	■	■	■										
23	Board assembly	7 739 831 385	■	■	■	■	■	■										
24	Plate for sealing	7 739 831 366	■	■	■	■	■	■										
25	Cover of water testing hole	7 739 831 367	■	■	■	■	■	■										
26	Brushless DC motor	8 733 501 243	■	■	■	■	■	■										
27	Cable clip	7 739 831 376	■	■	■	■	■	■										
28	Room temperature sensor	8 733 501 658	■	■	■	■	■	■										
29	Drainage pipe	8 733 501 340	■	■	■	■	■	■										
30	Drainage pipe clip	7 739 831 377	■	■	■	■	■	■										
31	Drainage pipe	7 739 831 386	■	■	■	■	■	■										
32	Drainage pipe	7 739 831 387	■	■	■	■	■	■										
33	Fan clip	7 739 831 378	■	■	■	■	■	■										
34	Water level switch	7 739 831 379	■	■	■	■	■	■										
35	Drainage pump	8 733 501 345	■	■	■	■	■	■										
36	Bracket of water level sensor	7 739 831 381	■	■	■	■	■	■										
37	Bracket of drainage pump	7 739 831 382	■	■	■	■	■	■										
38	Rubber ring	8 733 501 661	■	■	■	■	■	■										
39	Communication wires	8 733 501 272	■	■	■	■	■	■										
40	Earthing line	8 733 501 350	■	■	■	■	■	■										
41	Copper nut	7 739 836 168				■	■	■										
41	Copper nut	7 739 836 222	■	■	■													
42	Protection grille of fan	8 733 501 641	■	■	■	■	■	■										
	CCB (400mm, SELV adapter)	8 750 501 441	■	■	■	■	■	■										

AF-4C 28-1 P	7 733 700 897
AF-4C 36-1 P	7 733 700 898
AF-4C 45-1 P	7 733 700 899
AF-4C 56-1 P	7 733 700 900
AF-4C 71-1 P	7 733 700 901
AF-4C 80-1 P	7 733 700 902

Spare parts list

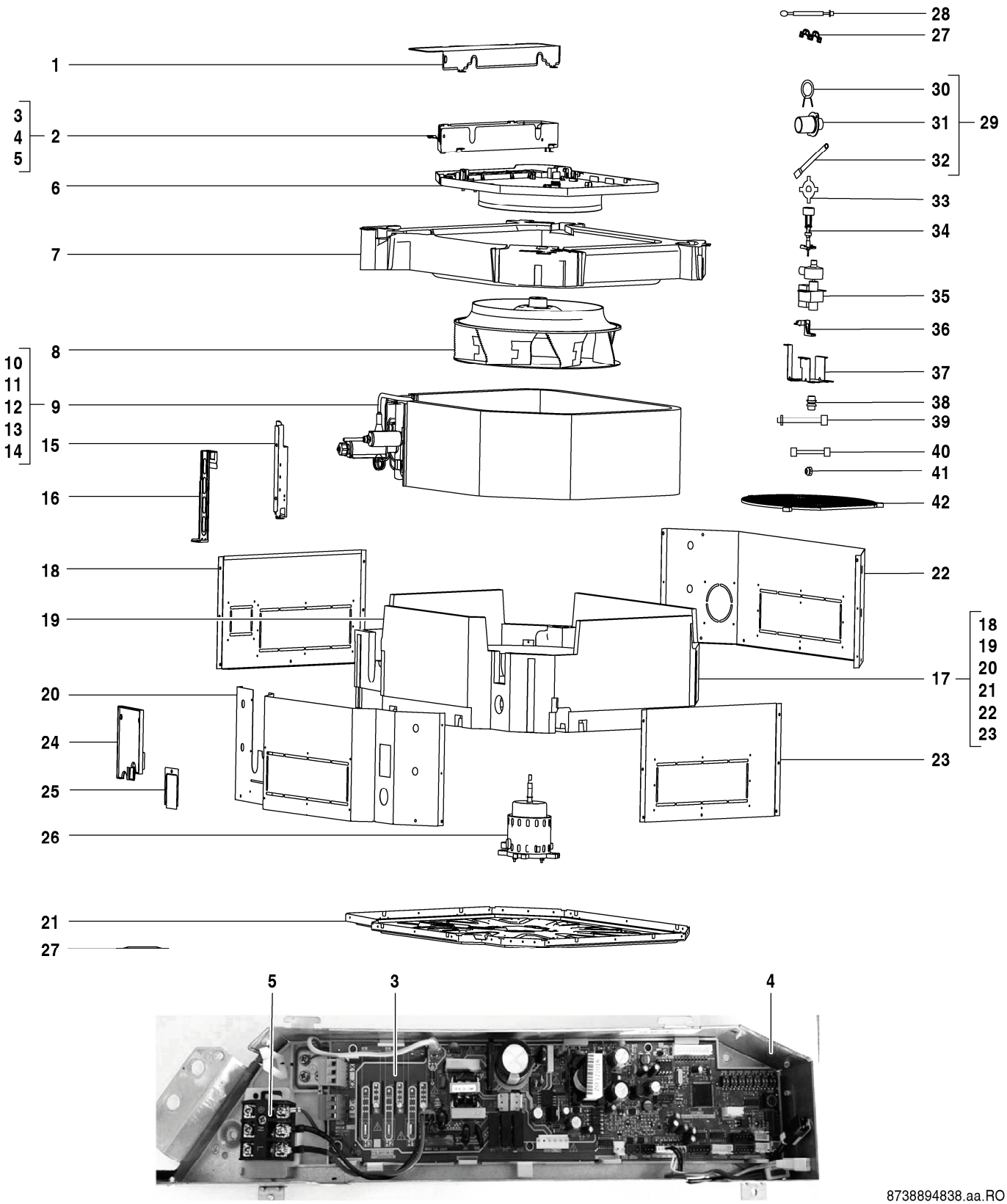

8738894838.aa.RO

AF-4C 28-1 P	7 733 700 897
AF-4C 36-1 P	7 733 700 898
AF-4C 45-1 P	7 733 700 899
AF-4C 56-1 P	7 733 700 900
AF-4C 71-1 P	7 733 700 901
AF-4C 80-1 P	7 733 700 902

Pos	Description	Ordering no.	4C 28-1 P	4C 36-1 P	4C 45-1 P	4C 56-1 P	4C 71-1 P	4C 80-1 P										Remarks
	Connection cable AF-4C/4CR	8 750 501 444	■	■	■	■	■	■										

AF-4C 28-1 P	7 733 700 897
AF-4C 36-1 P	7 733 700 898
AF-4C 45-1 P	7 733 700 899
AF-4C 56-1 P	7 733 700 900
AF-4C 71-1 P	7 733 700 901
AF-4C 80-1 P	7 733 700 902

Spare parts list

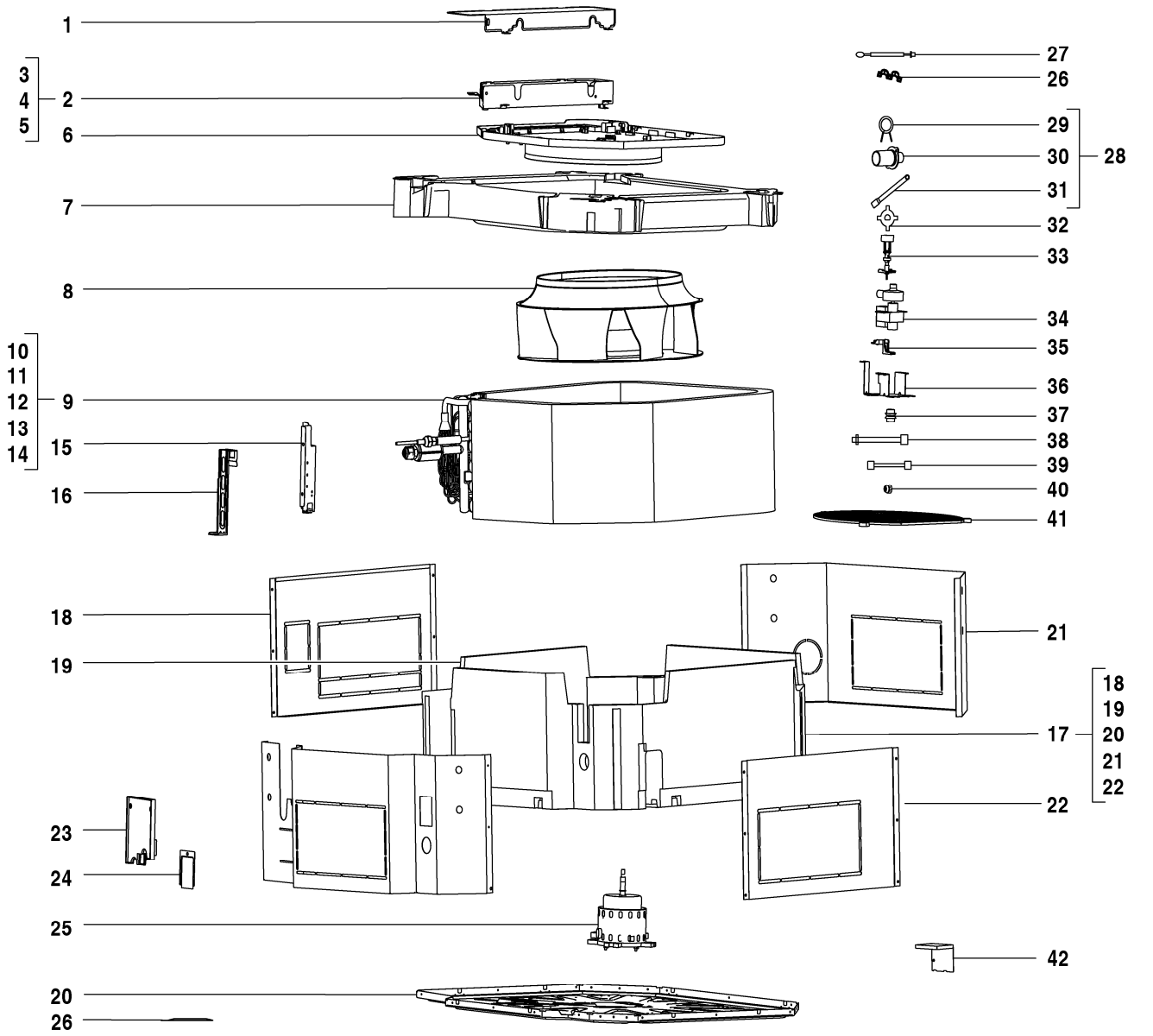

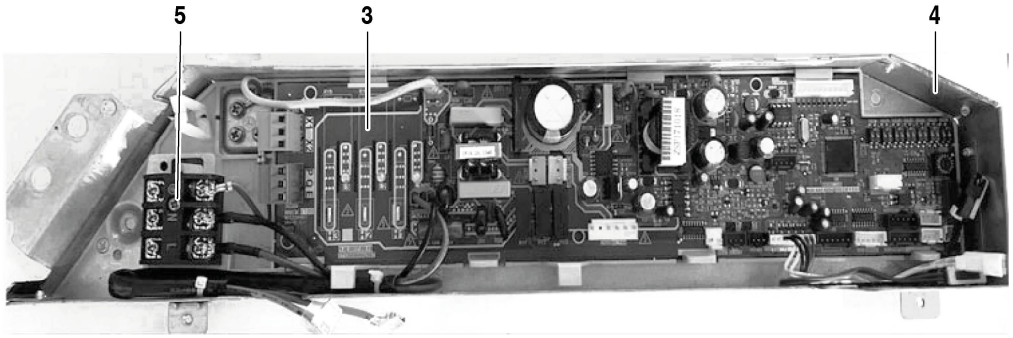

8738894839.aa.RO

AF-4C 100-1 P	7 733 700 904
AF-4C 112-1 P	7 733 700 905
AF-4C 140-1 P	7 733 700 906
AF-4C 90-1 P	7 733 700 903

Pos	Description	Ordering no.	4C 90-1 P	4C 100-1 P	4C 112-1 P	4C 140-1 P												Remarks
1	Cover of E-part box	8 733 501 318	■	■	■	■												
2	E-part box with electronic components	8 733 501 384	■	■	■	■												
3	AF4C-1 main board	8 750 501 471	■	■	■	■												
4	E-part box housing	8 733 501 370	■	■	■	■												
5	Wiring terminal	7 739 831 350	■	■	■	■												
6	Air outlet guider	7 739 831 351	■	■	■	■												
7	Drainage water pan	8 733 501 347	■	■	■	■												
8	Centrifugal fan	7 739 831 401	■	■	■	■												
9	Evaporator assembly	8 733 501 447	■	■	■													
9	Evaporator assembly	8 733 501 449				■												
10	Evaporator assembly	8 733 501 417	■	■	■													
10	Evaporator assembly	8 733 501 418				■												
11	Evaporator inlet pipe assembly	8 733 501 473	■	■	■													
11	Evaporator inlet pipe assembly	8 733 501 474				■												
12	Evaporator outlet pipe assembly	8 733 501 491				■												
12	Evaporator outlet pipe assembly	8 733 501 492	■	■	■													
13	EXV valve coil	8 733 501 508	■	■	■	■												
14	Pipe temperature sensor	7 733 700 028	■	■	■	■												
15	Mounting plate of evaporator	7 739 831 408	■	■	■													
15	Mounting plate of evaporator	7 739 831 425				■												
16	Mounting plate of evaporator	7 739 831 409	■	■	■													
16	Mounting plate of evaporator	7 739 831 426				■												
17	Chassis assembly	8 733 501 262	■	■	■	■												
18	Board assembly	7 739 831 410	■	■	■	■												
19	Foam	8 733 501 522	■	■	■	■												
20	Chassis assembly	7 739 836 156	■	■	■	■												
21	Board assembly	7 739 831 417	■	■	■	■												
22	Board assembly	7 739 831 418	■	■	■	■												
23	Plate for sealing	7 739 831 366	■	■	■	■												
24	Cover of water testing hole	7 739 831 367	■	■	■	■												
25	Brushless DC motor	8 733 501 244	■	■	■	■												
26	Cable clip	7 739 831 376	■	■	■	■												
27	Room temperature sensor	8 733 501 658	■	■	■	■												
28	Drainage pipe	8 733 501 339	■	■	■	■												
29	Drainage pipe clip	7 739 831 377	■	■	■	■												
30	Drainage pipe	7 739 831 386	■	■	■	■												
31	Drainage pipe	7 739 831 419	■	■	■	■												
32	Fan clip	7 739 831 378	■	■	■	■												
33	Water level switch	7 739 831 379	■	■	■	■												
34	Drainage pump	8 733 501 345	■	■	■	■												
35	Bracket of water level sensor	7 739 831 381	■	■	■	■												
36	Bracket of drainage pump	7 739 831 382	■	■	■	■												
37	Rubber ring	8 733 501 661	■	■	■	■												
38	Communication wires	8 733 501 272	■	■	■	■												
39	Earthing line	8 733 501 350	■	■	■	■												
39	Earthing line	8 733 501 351	■	■	■	■												
40	Copper nut	7 739 836 168		■	■	■												
41	Protection grille of fan	8 733 501 641	■	■	■	■												
42	Supporter	8 733 501 700	■	■	■	■												
	CCB (400mm, SELV adapter)	8 750 501 441	■	■	■	■												
	Connection cable AF-4C/4CR	8 750 501 444	■	■	■	■												

AF-4C 100-1 P	7 733 700 904
AF-4C 112-1 P	7 733 700 905
AF-4C 140-1 P	7 733 700 906
AF-4C 90-1 P	7 733 700 903

Spare parts list

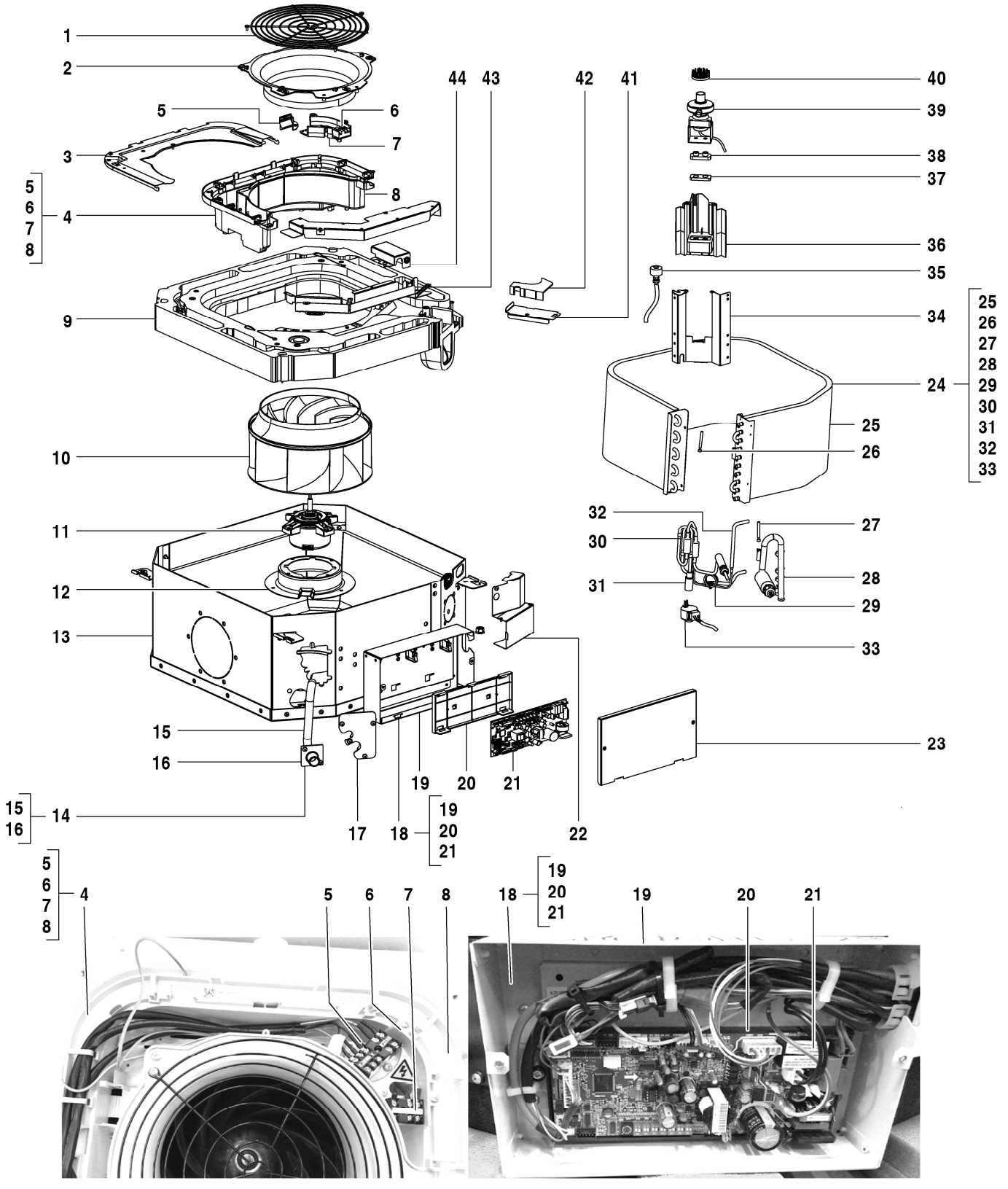

8738894840.aa.RO

AF-4CC 22-1 P	7 733 700 892
AF-4CC 28-1 P	7 733 700 893

Pos	Description	Ordering no.	4CC 22-1 P	4CC 28-1 P															Remarks
1	Protection grille of fan	8 733 501 642	■	■															
2	Air outlet guider	7 739 831 310	■	■															
3	Cover of E-part box	7 739 836 356	■	■															
4	E-part box with electronic components	8 733 501 391	■	■															
5	Wiring terminal	8 733 501 716	■	■															
6	Wiring terminal	7 739 831 308	■	■															
7	Wiring plate	7 739 831 305	■	■															
8	E-part box housing	8 733 501 368	■	■															
9	Drainage water pan	8 733 501 349	■	■															
10	Centrifugal fan	7 739 831 322	■	■															
11	Brushless DC motor	7 739 836 367	■	■															
12	Fan motor base	7 739 831 324	■	■															
13	Chassis assembly	8 733 501 261	■	■															
14	Drainage pipe	7 739 836 361	■	■															
15	Drainage pipe	7 739 831 314	■	■															
16	Drainage pipe	7 739 831 315	■	■															
17	Pipe clamp assembly	7 739 831 319	■	■															
18	E-part box with electronic components	8 733 501 392	■	■															
19	E-part box housing	8 733 501 374	■	■															
20	Mounting plate of PCB	7 739 831 570	■	■															
21	AF4CC-1 main board	8 750 501 470	■	■															
22	Clip	8 733 501 269	■	■															
23	Cover of E-part box	8 733 501 320	■	■															
24	Evaporator assembly	8 733 501 444	■	■															
25	Evaporator assembly	8 733 501 430	■	■															
26	Pipe temperature sensor	7 739 831 147	■	■															
27	Pipe temperature sensor	8 733 501 621	■	■															
28	Evaporator outlet pipe assembly	8 733 501 493	■	■															
29	Evaporator inlet pipe assembly	8 733 501 483	■	■															
30	Evaporator inlet pipe assembly	8 733 501 481	■	■															
31	EXV valve body	7 739 831 491	■	■															
32	Evaporator inlet pipe assembly	8 733 501 484	■	■															
33	EXV valve coil	7 739 831 512	■	■															
34	'Mounting plate of heat exchanger	7 739 831 318	■	■															
35	Water level switch	8 733 501 714	■	■															
36	Mounting base of water pump	7 739 831 313	■	■															
37	Rubber washer of drainage pump	8 733 501 663	■	■															
38	Rubber washer of drainage pump	8 733 501 662	■	■															
39	Drainage pump	7 739 831 317	■	■															
40	Anti-block grille for water pump	7 739 836 359	■	■															
41	Clip	8 733 501 268	■	■															
42	Wiring plate	7 739 831 320	■	■															
43	Clip	8 733 501 267	■	■															
44	Clip	8 733 501 270	■	■															
	CCB adapter set (800mm)	8 750 501 442	■	■															
	Connection cable AF-4CC	8 750 501 445	■	■															

AF-4CC 22-1 P	7 733 700 892
AF-4CC 28-1 P	7 733 700 893

Spare parts list

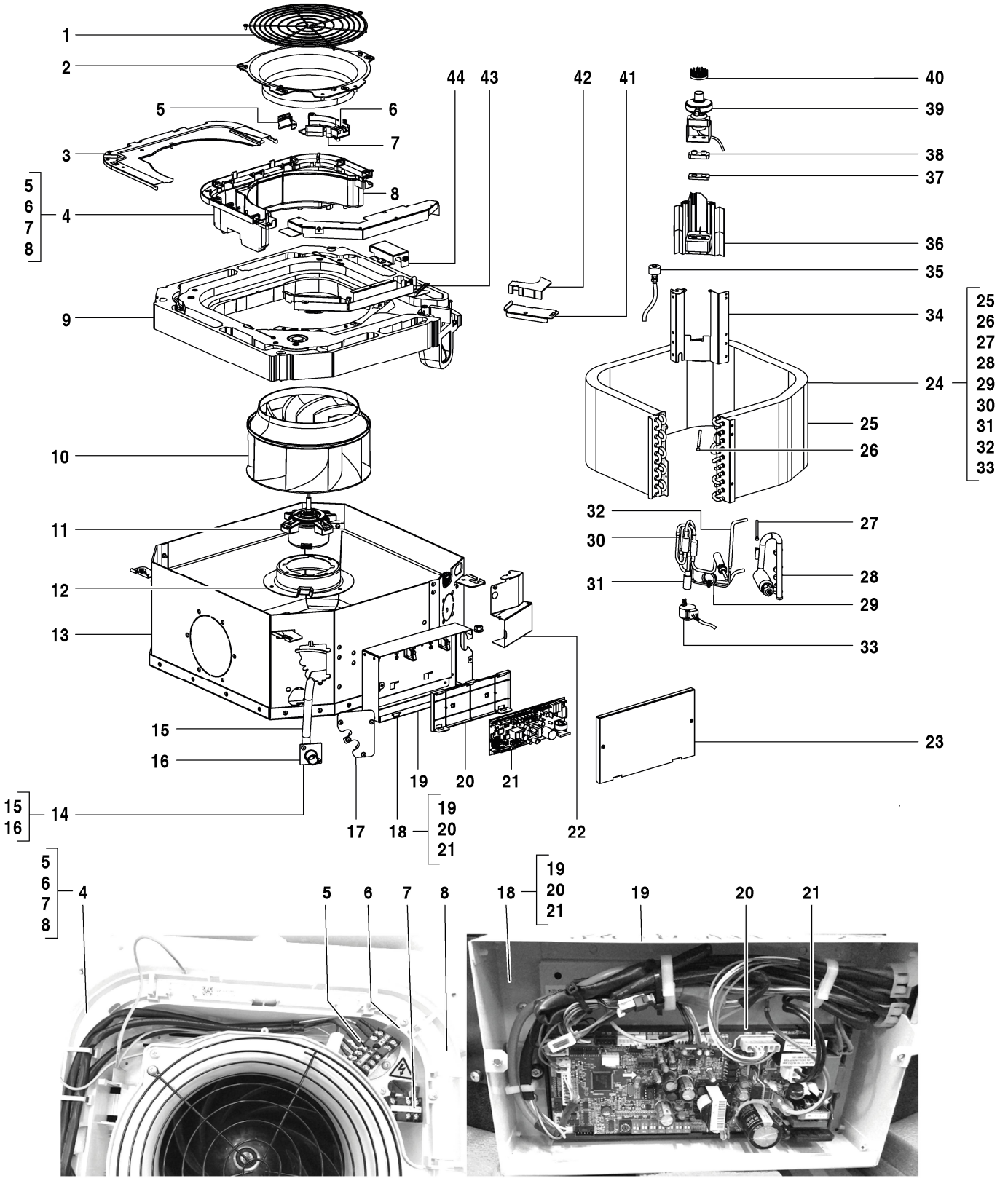

AF-4CC 36-1 P	7 733 700 894
AF-4CC 45-1 P	7 733 700 895

Pos	Description	Ordering no.	4CC 36-1 P	4CC 45-1 P															Remarks
1	Protection grille of fan	8 733 501 642	■	■															
2	Air outlet guider	7 739 831 310	■	■															
3	Cover of E-part box	7 739 836 356	■	■															
4	E-part box with electronic components	8 733 501 391	■	■															
5	Wiring terminal	8 733 501 716	■	■															
6	Wiring terminal	7 739 831 308	■	■															
7	Wiring plate	7 739 831 305	■	■															
8	E-part box housing	8 733 501 368	■	■															
9	Drainage water pan	8 733 501 349	■	■															
10	Centrifugal fan	7 739 831 322	■	■															
11	Brushless DC motor	7 739 836 367	■	■															
12	Fan motor base	7 739 831 324	■	■															
13	Chassis assembly	8 733 501 261	■	■															
14	Drainage pipe	7 739 836 361	■	■															
15	Drainage pipe	7 739 831 314	■	■															
16	Drainage pipe	7 739 831 315	■	■															
17	Pipe clamp assembly	7 739 831 319	■	■															
18	E-part box with electronic components	8 733 501 392	■	■															
19	E-part box housing	8 733 501 374	■	■															
20	Mounting plate of PCB	7 739 831 570	■	■															
21	AF4CC-1 main board	8 750 501 470	■	■															
22	Clip	8 733 501 269	■	■															
23	Cover of E-part box	8 733 501 320	■	■															
24	Evaporator assembly	8 733 501 444	■																
24	Evaporator assembly	8 733 501 445		■															
25	Evaporator assembly	8 733 501 430	■																
25	Evaporator assembly	8 733 501 431		■															
26	Pipe temperature sensor	7 739 831 147	■	■															
27	Pipe temperature sensor	8 733 501 621	■	■															
28	Evaporator outlet pipe assembly	8 733 501 489		■															
28	Evaporator outlet pipe assembly	8 733 501 493	■																
29	Evaporator inlet pipe assembly	8 733 501 483	■																
29	Evaporator inlet pipe assembly	8 733 501 485		■															
30	Evaporator inlet pipe assembly	8 733 501 481	■	■															
31	EXV valve body	7 739 831 491	■	■															
32	Evaporator inlet pipe assembly	8 733 501 484	■																
32	Evaporator inlet pipe assembly	8 733 501 486		■															
33	EXV valve coil	7 739 831 512	■	■															
34	'Mounting plate of heat exchanger	7 739 831 318	■	■															
35	Water level switch	8 733 501 714	■	■															
36	Mounting base of water pump	7 739 831 313	■	■															
37	Rubber washer of drainage pump	8 733 501 663	■	■															
38	Rubber washer of drainage pump	8 733 501 662	■	■															
39	Drainage pump	7 739 831 317	■	■															
40	Anti-block grille for water pump	7 739 836 359	■	■															
41	Clip	8 733 501 268	■	■															
42	Wiring plate	7 739 831 320	■	■															
43	Clip	8 733 501 267	■	■															
44	Clip	8 733 501 270	■	■															
	CCB adapter set (800mm)	8 750 501 442	■	■															
	Connection cable AF-4CC	8 750 501 445	■	■															

AF-4CC 36-1 P	7 733 700 894
AF-4CC 45-1 P	7 733 700 895

Spare parts list

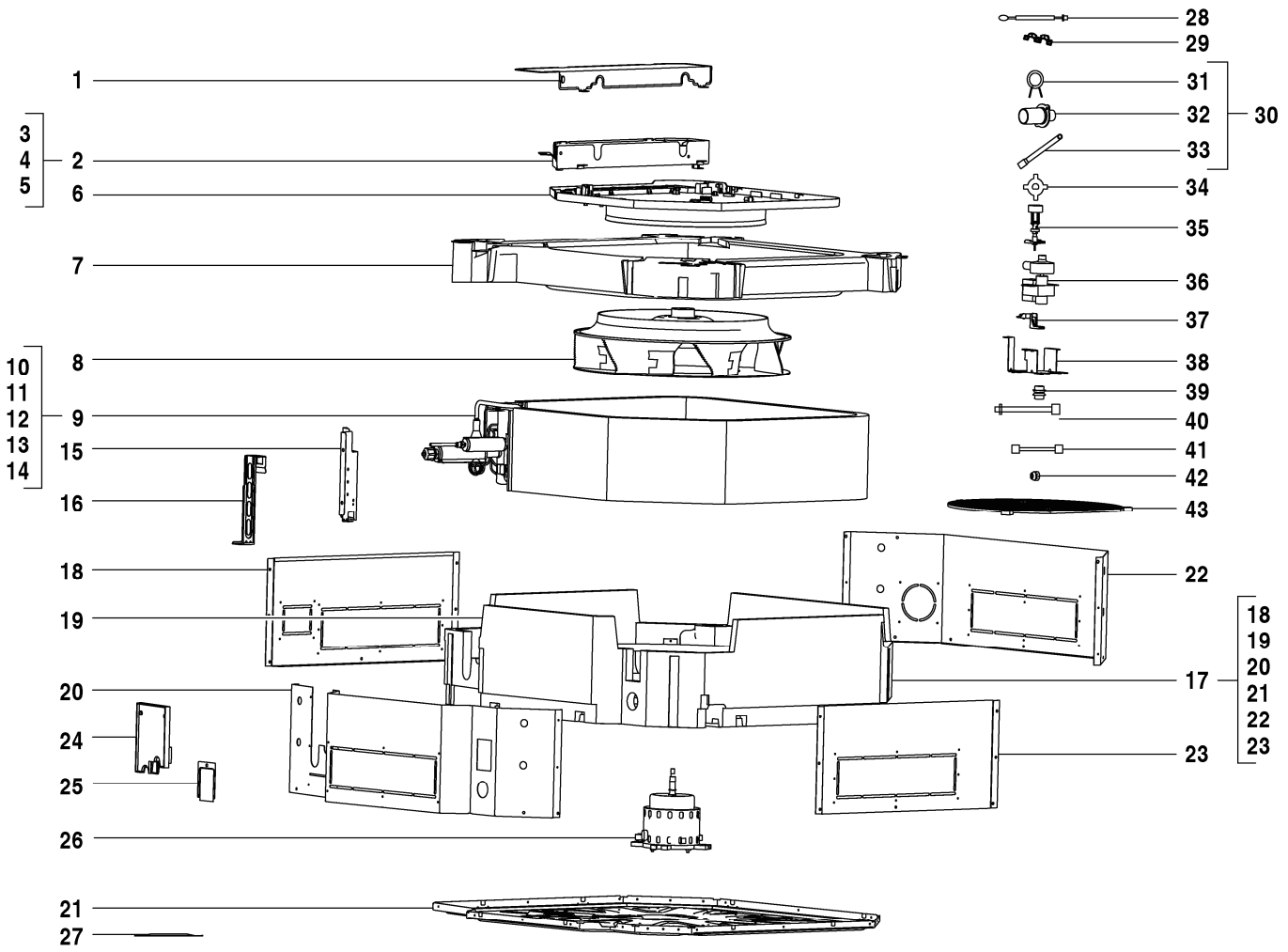

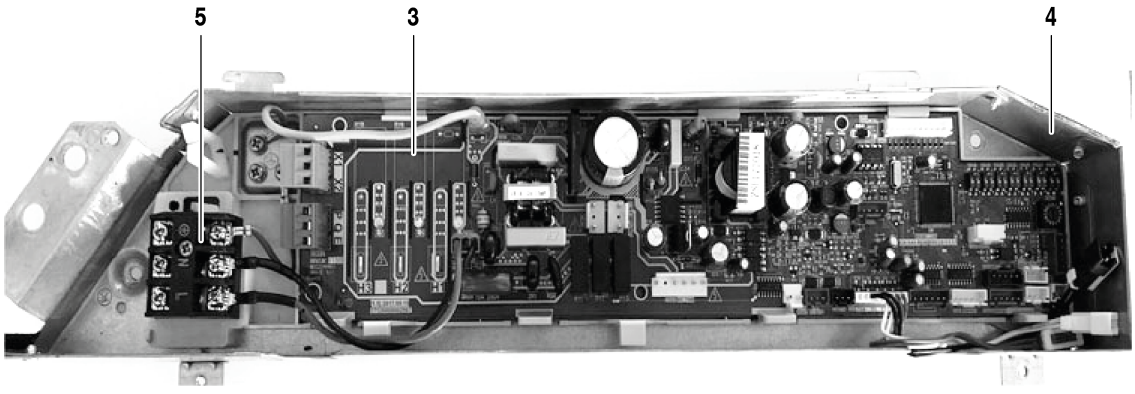

8738894893.aa.RO

AF-4CR 28-1 P	7 733 700 907
AF-4CR 36-1 P	7 733 700 908
AF-4CR 45-1 P	7 733 700 909
AF-4CR 56-1 P	7 733 700 910
AF-4CR 71-1 P	7 733 700 911
AF-4CR 80-1 P	7 733 700 912

Pos	Description	Ordering no.	4CR 28-1 P	4CR 36-1 P	4CR 45-1 P	4CR 56-1 P	4CR 71-1 P	4CR 80-1 P										Remarks
1	Cover of E-part box	8 733 501 318	■	■	■	■	■	■										
2	E-part box with electronic components	8 733 501 385	■	■	■	■	■	■										
3	AF4C-1 main board	8 750 501 471	■	■	■	■	■	■										
4	E-part box housing	8 733 501 370	■	■	■	■	■	■										
5	Wiring terminal	7 739 831 350	■	■	■	■	■	■										
6	Air outlet guider	7 739 831 351	■	■	■	■	■	■										
7	Drainage water pan	8 733 501 348	■	■	■	■	■	■										
8	Centrifugal fan	7 739 831 353	■	■	■	■	■	■										
9	Evaporator assembly	8 733 501 446	■	■														
9	Evaporator assembly	8 733 501 448			■													
9	Evaporator assembly	8 733 501 450				■	■	■										
10	Evaporator assembly	8 733 501 415			■	■	■	■										
10	Evaporator assembly	8 733 501 416	■	■														
11	Evaporator inlet pipe assembly	8 733 501 475			■													
11	Evaporator inlet pipe assembly	8 733 501 476				■	■	■										
11	Evaporator inlet pipe assembly	8 733 501 477	■	■														
12	Evaporator outlet pipe assembly	7 739 836 225	■	■														
12	Evaporator outlet pipe assembly	8 733 501 490			■													
12	Evaporator outlet pipe assembly	8 733 501 494				■	■	■										
13	EXV valve coil	8 733 501 508	■	■	■	■	■	■										
14	Pipe temperature sensor	7 733 700 028	■	■	■	■	■	■										
15	Mounting plate of evaporator	7 739 831 361	■	■														
15	Mounting plate of evaporator	7 739 831 394			■	■	■	■										
16	Mounting plate of evaporator	7 739 831 362	■	■	■	■	■	■										
17	Chassis assembly	8 733 501 263	■	■	■	■	■	■										
18	Board assembly	7 739 831 363	■	■	■	■	■	■										
19	Foam	8 733 501 523	■	■	■	■	■	■										
20	Board assembly	7 739 831 365	■	■	■	■	■	■										
21	Chassis assembly	7 739 836 184	■	■	■	■	■	■										
22	Board assembly	7 739 831 384	■	■	■	■	■	■										
23	Board assembly	7 739 831 385	■	■	■	■	■	■										
24	Plate for sealing	7 739 831 366	■	■	■	■	■	■										
25	Cover of water testing hole	7 739 831 367	■	■	■	■	■	■										
26	Brushless DC motor	8 733 501 243	■	■	■	■	■	■										
27	Cable clip	7 739 831 376	■	■	■	■	■	■										
28	Room temperature sensor	8 733 501 658	■	■	■	■	■	■										
29	Cable clip	7 739 831 376	■	■	■	■	■	■										
30	Drainage pipe	8 733 501 340	■	■	■	■	■	■										
31	Drainage pipe clip	7 739 831 377	■	■	■	■	■	■										
32	Drainage pipe	7 739 831 386	■	■	■	■	■	■										
33	Drainage pipe	7 739 831 387	■	■	■	■	■	■										
34	Fan clip	7 739 831 378	■	■	■	■	■	■										
35	Water level switch	7 739 831 379	■	■	■	■	■	■										
36	Drainage pump	8 733 501 345	■	■	■	■	■	■										
37	Bracket of water level sensor	7 739 831 381	■	■	■	■	■	■										
38	Bracket of drainage pump	7 739 831 382	■	■	■	■	■	■										
39	Rubber ring	8 733 501 661	■	■	■	■	■	■										
40	Communication wires	8 733 501 272	■	■	■	■	■	■										
41	Earthing line	8 733 501 350	■	■	■	■	■	■										
42	Copper nut	7 739 836 168				■	■	■										
42	Copper nut	7 739 836 222	■	■	■													
43	Protection grille of fan	8 733 501 641	■	■	■	■	■	■										

AF-4CR 28-1 P	7 733 700 907
AF-4CR 36-1 P	7 733 700 908
AF-4CR 45-1 P	7 733 700 909
AF-4CR 56-1 P	7 733 700 910
AF-4CR 71-1 P	7 733 700 911
AF-4CR 80-1 P	7 733 700 912

Spare parts list

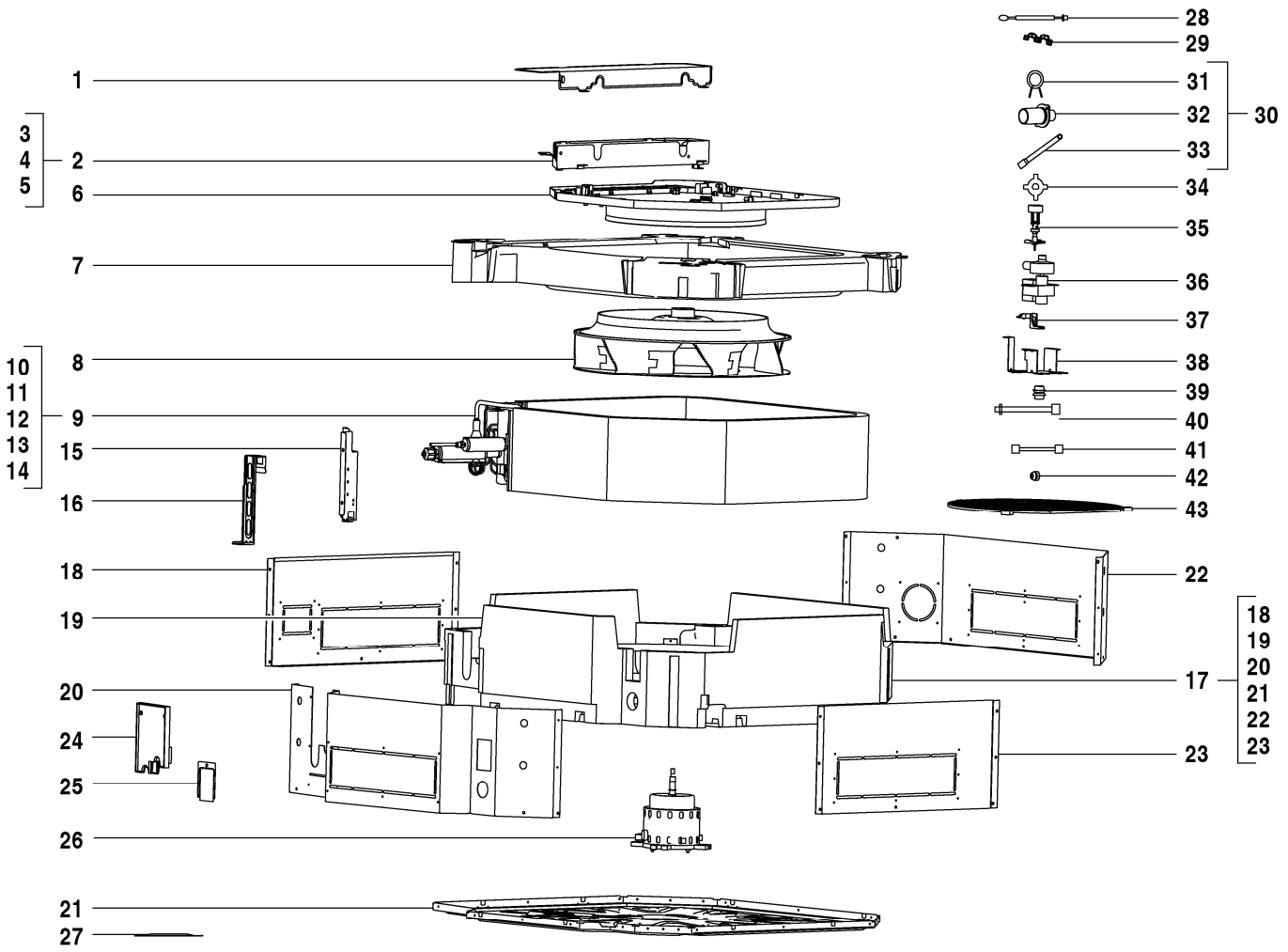

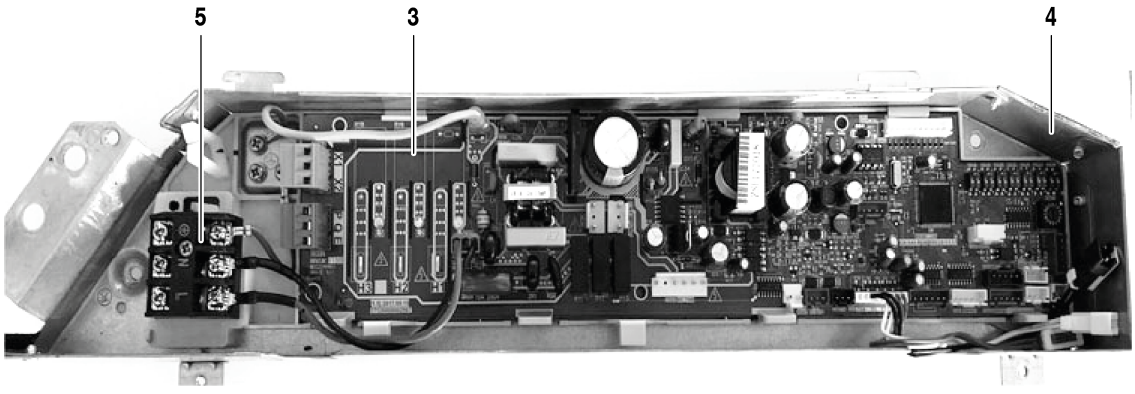

8738894893.aa.RO

AF-4CR 28-1 P	7 733 700 907
AF-4CR 36-1 P	7 733 700 908
AF-4CR 45-1 P	7 733 700 909
AF-4CR 56-1 P	7 733 700 910
AF-4CR 71-1 P	7 733 700 911
AF-4CR 80-1 P	7 733 700 912

Pos	Description	Ordering no.	4CR 28-1 P	4CR 36-1 P	4CR 45-1 P	4CR 56-1 P	4CR 71-1 P	4CR 80-1 P										Remarks
	CCB (400mm, SELV adapter)	8 750 501 441	■	■	■	■	■	■										
	Connection cable AF-4C/4CR	8 750 501 444	■	■	■	■	■	■										

AF-4CR 28-1 P	7 733 700 907
AF-4CR 36-1 P	7 733 700 908
AF-4CR 45-1 P	7 733 700 909
AF-4CR 56-1 P	7 733 700 910
AF-4CR 71-1 P	7 733 700 911
AF-4CR 80-1 P	7 733 700 912

Spare parts list

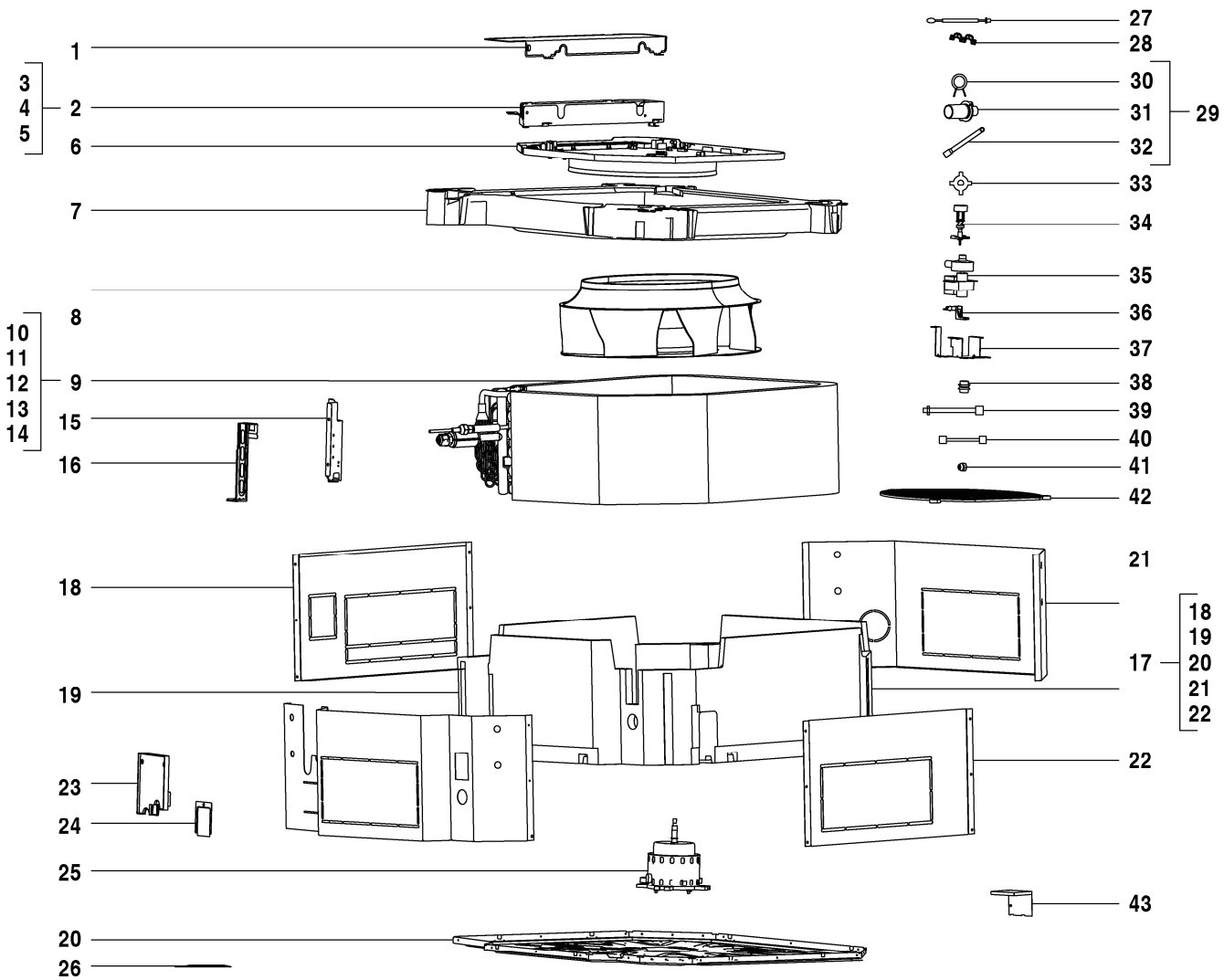

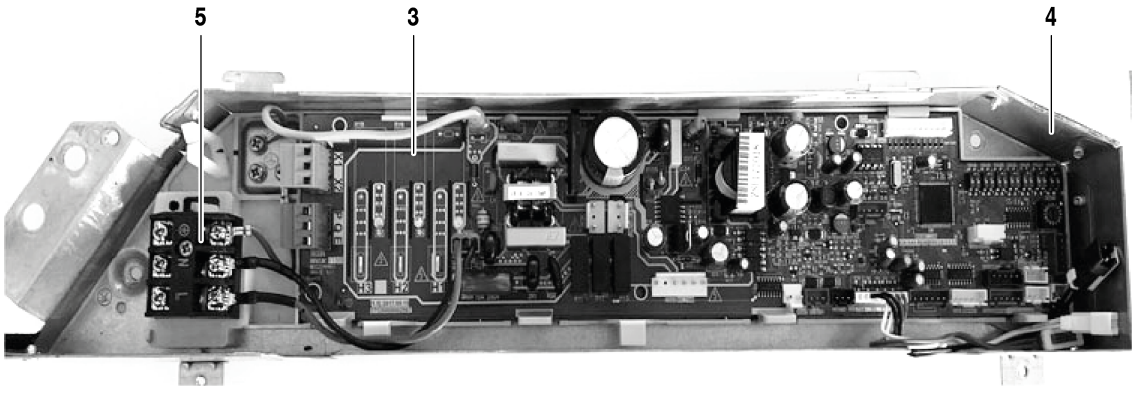

8738894894.aa.RO

AF-4CR 100-1 P	7 733 700 914
AF-4CR 112-1 P	7 733 700 915
AF-4CR 140-1 P	7 733 700 916
AF-4CR 90-1 P	7 733 700 913

Pos	Description	Ordering no.	4CR 90-1 P	4CR 100-1 P	4CR 112-1 P	4CR 140-1 P												Remarks
1	Cover of E-part box	8 733 501 318	■	■	■	■												
2	E-part box with electronic components	8 733 501 384	■	■	■	■												
3	AF4C-1 main board	8 750 501 471	■	■	■	■												
4	E-part box housing	8 733 501 370	■	■	■	■												
5	Wiring terminal	7 739 831 350	■	■	■	■												
6	Air outlet guider	7 739 831 351	■	■	■	■												
7	Drainage water pan	8 733 501 347	■	■	■	■												
8	Centrifugal fan	7 739 831 401	■	■	■	■												
9	Evaporator assembly	8 733 501 447	■	■	■													
9	Evaporator assembly	8 733 501 449				■												
10	Evaporator assembly	8 733 501 417	■	■	■													
10	Evaporator assembly	8 733 501 418				■												
11	Evaporator inlet pipe assembly	8 733 501 473	■	■	■													
11	Evaporator inlet pipe assembly	8 733 501 474				■												
12	Evaporator outlet pipe assembly	8 733 501 491				■												
12	Evaporator outlet pipe assembly	8 733 501 492	■	■	■													
13	EXV valve coil	8 733 501 508	■	■	■	■												
14	Pipe temperature sensor	7 733 700 028	■	■	■	■												
15	Mounting plate of evaporator	7 739 831 408	■	■	■													
15	Mounting plate of evaporator	7 739 831 425				■												
16	Mounting plate of evaporator	7 739 831 409	■	■	■													
16	Mounting plate of evaporator	7 739 831 426				■												
17	Chassis assembly	8 733 501 262	■	■	■	■												
18	Board assembly	7 739 831 410	■	■	■	■												
19	Foam	8 733 501 522	■	■	■	■												
20	Chassis assembly	7 739 836 156	■	■	■	■												
21	Board assembly	7 739 831 417	■	■	■	■												
22	Board assembly	7 739 831 418	■	■	■	■												
23	Plate for sealing	7 739 831 366	■	■	■	■												
24	Cover of water testing hole	7 739 831 367	■	■	■	■												
25	Brushless DC motor	8 733 501 244	■	■	■	■												
26	Cable clip	7 739 831 376	■	■	■	■												
27	Room temperature sensor	8 733 501 658	■	■	■	■												
28	Cable clip	7 739 831 376	■	■	■	■												
29	Drainage pipe	8 733 501 339	■	■	■	■												
30	Drainage pipe clip	7 739 831 377	■	■	■	■												
31	Drainage pipe	7 739 831 386	■	■	■	■												
32	Drainage pipe	7 739 831 419	■	■	■	■												
33	Fan clip	7 739 831 378	■	■	■	■												
34	Water level switch	7 739 831 379	■	■	■	■												
35	Drainage pump	8 733 501 345	■	■	■	■												
36	Bracket of water level sensor	7 739 831 381	■	■	■	■												
37	Bracket of drainage pump	7 739 831 382	■	■	■	■												
38	Rubber ring	8 733 501 661	■	■	■	■												
39	Communication wires	8 733 501 272	■	■	■	■												
40	Earthing line	8 733 501 350	■	■	■	■												
40	Earthing line	8 733 501 351	■	■	■	■												
41	Copper nut	7 739 836 168	■	■	■	■												
42	Protection grille of fan	8 733 501 641	■	■	■	■												
43	Supporter	8 733 501 700	■	■		■												
43	Supporter	8 733 501 712			■													
	CCB (400mm, SELV adapter)	8 750 501 441	■	■	■	■												

AF-4CR 100-1 P	7 733 700 914
AF-4CR 112-1 P	7 733 700 915
AF-4CR 140-1 P	7 733 700 916
AF-4CR 90-1 P	7 733 700 913

Spare parts list

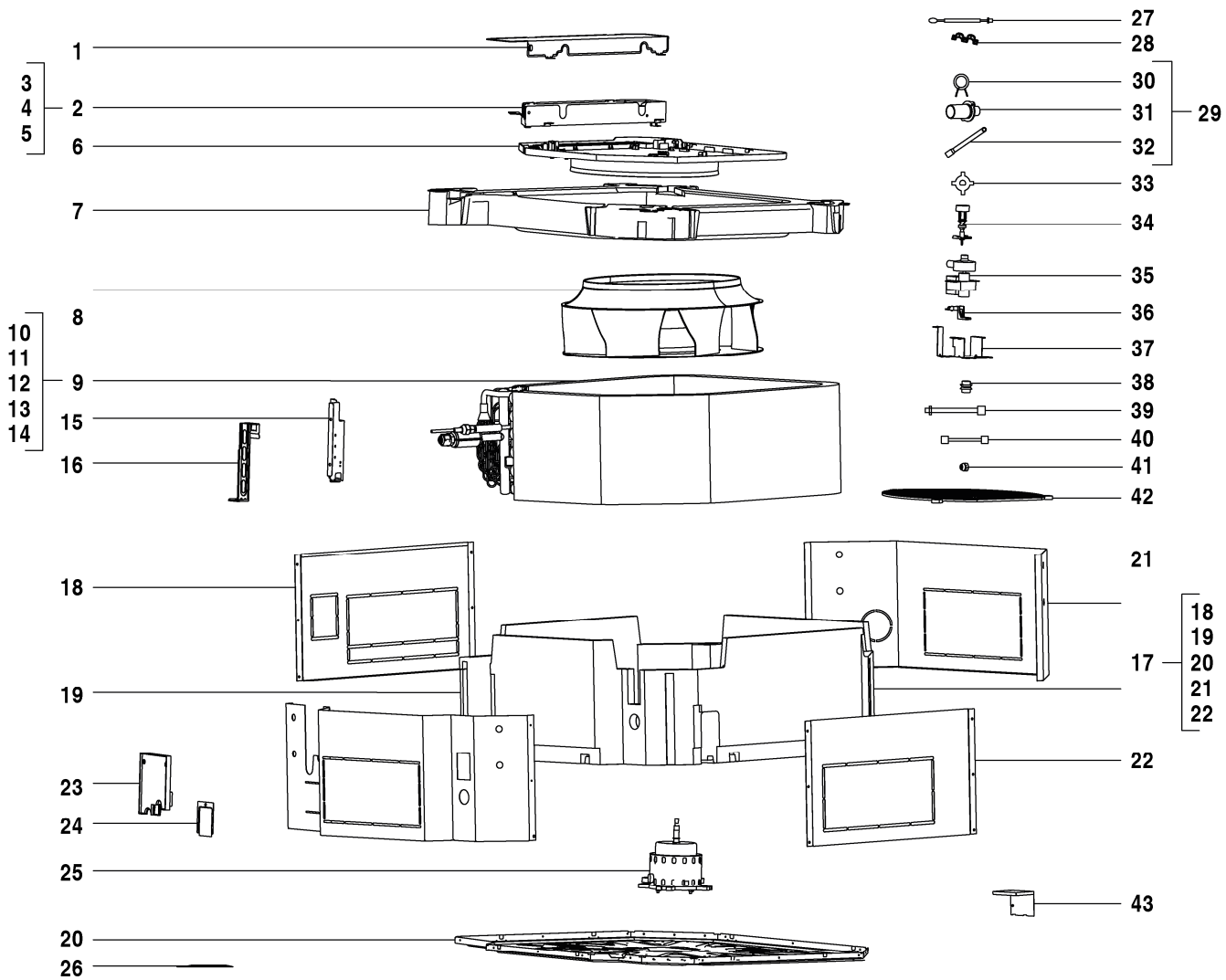

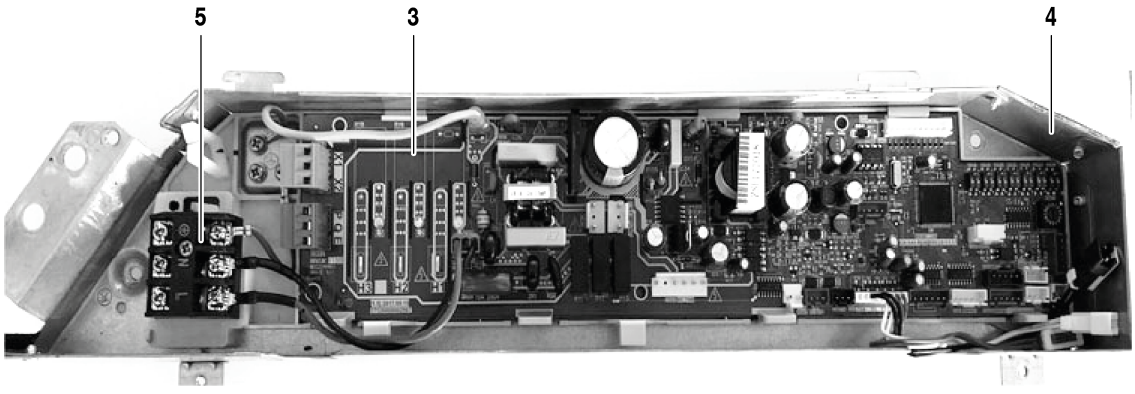

8738894894.aa.RO

AF-4CR 100-1 P	7 733 700 914
AF-4CR 112-1 P	7 733 700 915
AF-4CR 140-1 P	7 733 700 916
AF-4CR 90-1 P	7 733 700 913

Pos	Description	Ordering no.	4CR 90-1 P	4CR 100-1 P	4CR 112-1 P	4CR 140-1 P												Remarks
	Connection cable AF-4C/4CR	8 750 501 444	■	■	■	■												

AF-4CR 100-1 P	7 733 700 914
AF-4CR 112-1 P	7 733 700 915
AF-4CR 140-1 P	7 733 700 916
AF-4CR 90-1 P	7 733 700 913

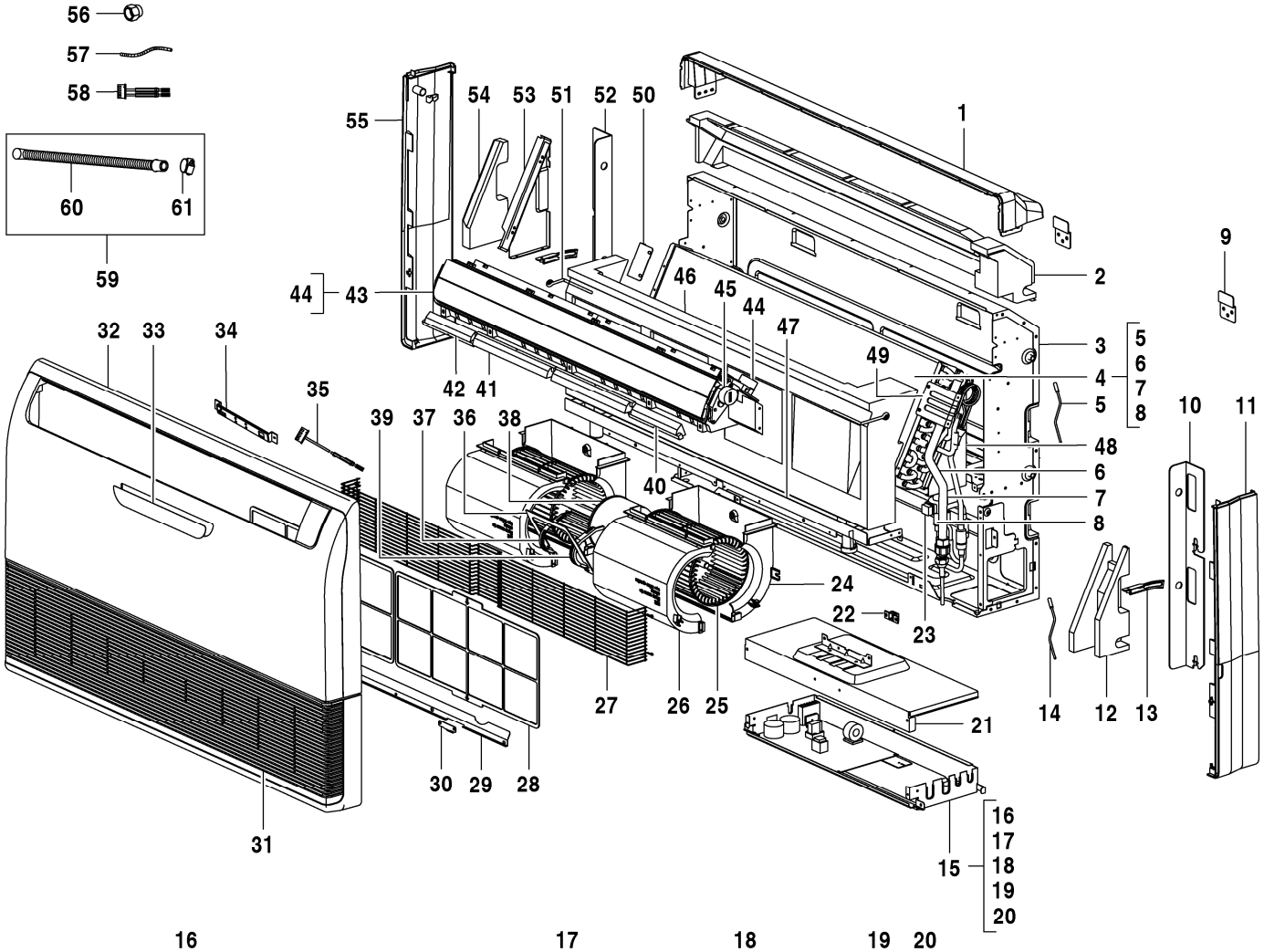

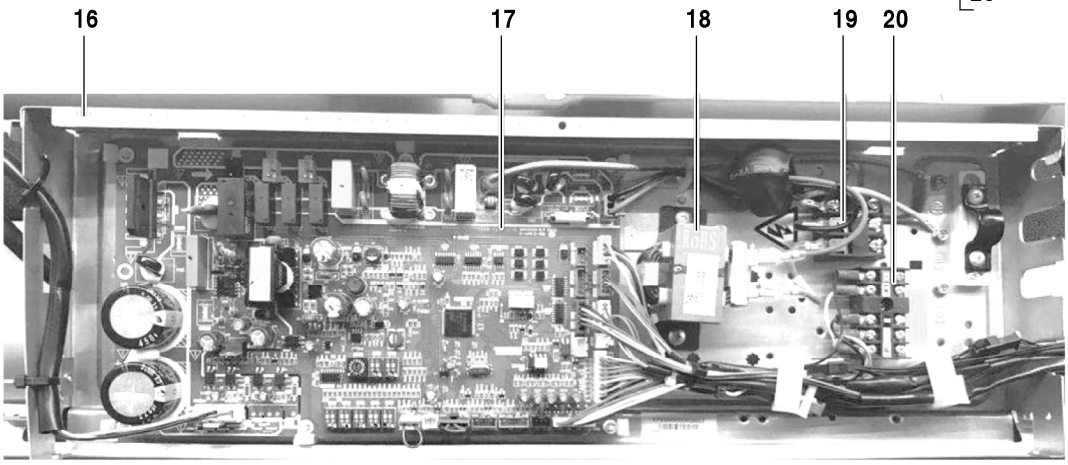

8738894842.aa.RO

AF-CF 36-1	7 733 701 489
AF-CF 45-1	7 733 701 490
AF-CF 56-1	7 733 701 491
AF-CF 71-1	7 733 701 492

Pos	Description	Ordering no.	CF 36-1	CF 45-1	CF 56-1	CF 71-1												Remarks
1	Cover	7 739 831 862	■	■	■	■												
2	Foam of chassis assembly	7 739 836 227	■	■	■	■												
3	Chassis assembly	7 739 836 228	■	■	■	■												
4	Evaporator assembly	7 739 831 869		■														
4	Evaporator assembly	7 739 831 873			■	■												
4	Evaporator assembly	8 733 501 721	■															
5	Pipe temperature sensor	7 739 831 147	■	■	■	■												
6	Evaporator outlet pipe assembly	7 739 831 870		■														
6	Evaporator outlet pipe assembly	7 739 831 874			■	■												
6	Evaporator outlet pipe assembly	8 733 501 723	■															
7	Evaporator inlet pipe assembly	7 739 831 871		■														
7	Evaporator inlet pipe assembly	7 739 831 875			■	■												
7	Evaporator inlet pipe assembly	8 733 501 722	■															
8	EXV valve body	7 739 831 491	■	■	■	■												
9	Mounting base	7 739 836 226	■	■	■	■												
10	Mounting plate	7 739 831 864	■	■	■	■												
11	Cover	7 739 831 865	■	■	■	■												
12	Foam	7 739 836 241	■	■	■	■												
13	Grille clamp	7 739 831 854	■	■	■	■												
14	Pipe temperature sensor	7 733 700 028	■															
14	Pipe temperature sensor	7 739 834 388		■	■	■												
15	E-part box with electronic components	8 733 501 388	■	■	■	■												
16	E-part box housing	7 739 836 231	■	■	■	■												
17	Indoor unit main PCB	8 733 501 545	■	■	■	■												
18	Reactor	8 733 501 651	■	■	■	■												
19	Wiring terminal	7 739 831 566	■	■	■	■												
20	Wiring terminal	8 733 501 716	■	■	■	■												
21	Cover of E-part box	7 739 836 229	■	■	■	■												
22	Grille clamp	7 739 831 838	■	■	■	■												
23	EXV valve coil	7 739 831 358	■	■	■	■												
24	Shell of centrifugal fan, down	7 739 831 832	■	■	■	■												
25	Centrifugal fan	8 733 501 253	■	■	■	■												
26	Shell of centrifugal fan	7 739 836 235	■	■	■	■												
27	Protection grille	8 733 501 638	■	■	■	■												
28	Air filter	7 739 831 839	■	■	■	■												
29	Strengthen rib of grille	7 739 831 861	■	■	■	■												
30	Grille clamp	7 739 831 826	■	■	■	■												
31	Strengthen rib of grille	7 739 831 861	■	■	■	■												
32	Panel	8 733 501 603	■	■	■	■												
33	Display board	8 733 501 335	■	■	■	■												
34	Display board	8 733 501 337	■	■	■	■												
35	Compressor wiring cable	8 733 501 277	■	■	■	■												
36	Board assembly	7 739 834 812	■	■	■	■												
37	Cover of motor, left	7 739 831 538	■	■	■	■												
38	Brushless DC motor	7 739 834 661	■	■	■	■												
39	Cover of motor, right	7 739 831 541	■	■	■	■												
40	Foam of air outlet frame	7 739 836 242	■	■	■	■												
41	Foam of air outlet frame	7 739 836 243	■	■	■	■												
42	Foam of air outlet frame	7 739 836 244	■	■	■	■												
43	Air outlet frame assembly	7 739 831 844	■	■	■	■												
44	Step motor	7 739 831 474	■	■	■	■												
45	Step motor	7 739 831 866	■	■	■	■												

AF-CF 36-1	7 733 701 489
AF-CF 45-1	7 733 701 490
AF-CF 56-1	7 733 701 491
AF-CF 71-1	7 733 701 492

Spare parts list

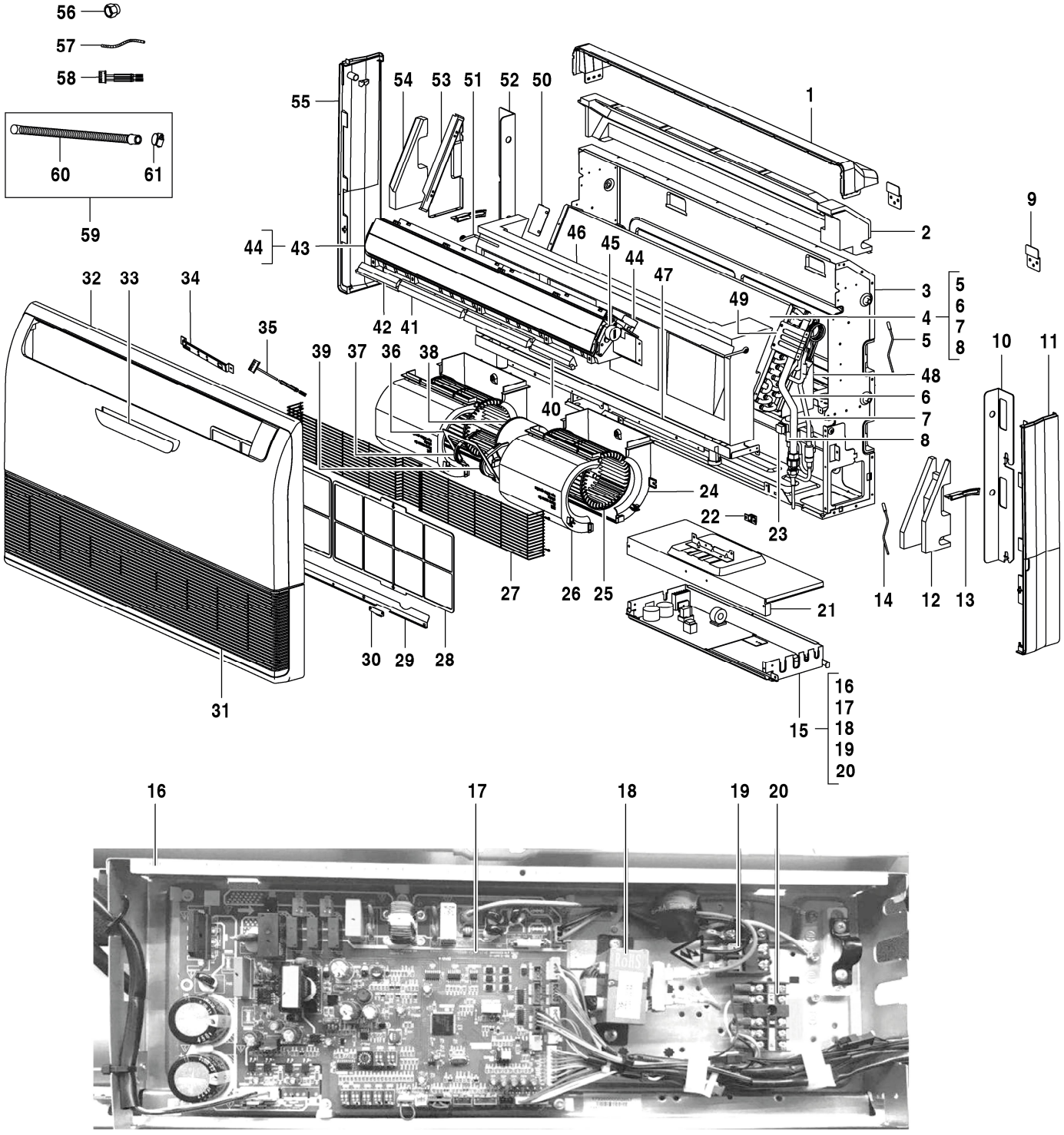

8738894842.aa.RO

AF-CF 36-1	7 733 701 489
AF-CF 45-1	7 733 701 490
AF-CF 56-1	7 733 701 491
AF-CF 71-1	7 733 701 492

Pos	Description	Ordering no.	CF 36-1	CF 45-1	CF 56-1	CF 71-1												Remarks
46	Drainage water pan	7 739 836 239	■	■	■	■												
47	Beam, middle	7 739 831 841	■	■	■	■												
48	Mounting plate of evaporator	7 739 831 853	■	■	■	■												
49	Mounting plate of heat exchanger	7 739 831 863	■	■	■	■												
50	Mounting plate of heat exchanger	7 739 831 859	■	■	■	■												
51	Fixing cable of drainage water pan	7 739 831 849	■	■	■	■												
52	Mounting plate	7 739 831 860	■	■	■	■												
53	Foam	7 739 836 240	■	■	■	■												
54	Mounting plate of evaporator	7 739 831 850	■	■	■	■												
55	Cover	7 739 831 858	■	■	■	■												
56	Copper nut	7 739 836 168			■	■												
56	Copper nut	7 739 836 222	■	■														
57	Room temperature sensor	7 739 834 401	■	■	■	■												
58	Compressor wiring cable	8 733 501 277	■	■	■	■												
59	Accessory package	7 739 836 233	■	■	■	■												
60	Drainage pipe	7 739 831 834	■	■	■	■												
61	Drainage pipe clip	8 733 501 341	■	■	■	■												
	CCB (400mm, SELV adapter)	8 750 501 441	■	■	■	■												
	Connection cable AF-IDU	8 750 501 446	■	■	■	■												

AF-CF 36-1	7 733 701 489
AF-CF 45-1	7 733 701 490
AF-CF 56-1	7 733 701 491
AF-CF 71-1	7 733 701 492

Spare parts list

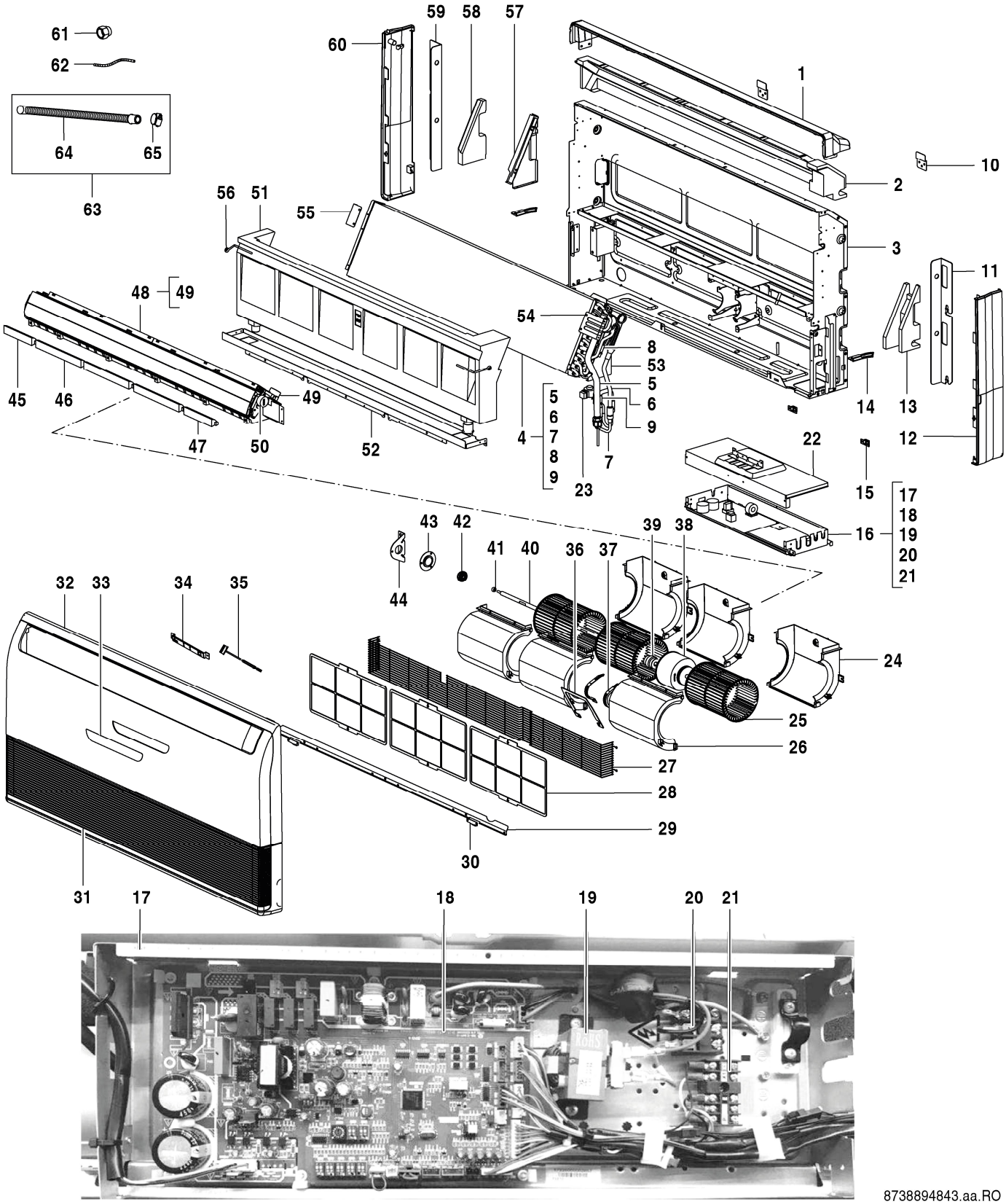

AF-CF 80-1	7 733 701 493
AF-CF 90-1	7 733 701 494

Pos	Description	Ordering no.	CF 80-1	CF 90-1															Remarks
1	Cover	7 739 836 270	■	■															
2	Foam of chassis assembly	7 739 836 272	■	■															
3	Chassis assembly	7 739 836 273	■	■															
4	Evaporator assembly	7 739 831 888	■	■															
5	Evaporator outlet pipe assembly	7 739 831 889	■	■															
6	Evaporator inlet pipe assembly	7 739 836 288	■	■															
7	EXV valve body	7 739 831 491	■	■															
8	Pipe temperature sensor	7 739 834 834	■	■															
9	Pipe temperature sensor	7 739 834 388	■	■															
10	Mounting base	7 739 836 226	■	■															
11	Mounting plate	7 739 831 864	■	■															
12	Cover	7 739 831 865	■	■															
13	Foam	7 739 836 241	■	■															
14	Grille clamp	7 739 831 854	■	■															
15	Grille clamp	7 739 831 838	■	■															
16	E-part box with electronic components	8 733 501 388	■	■															
17	E-part box housing	7 739 836 231	■	■															
18	Indoor unit main PCB	8 733 501 545	■	■															
19	Reactor	8 733 501 651	■	■															
20	Wiring terminal	7 739 831 566	■	■															
21	Wiring terminal	8 733 501 716	■	■															
22	Cover of E-part box	7 739 836 229	■	■															
23	EXV valve coil	7 739 831 358	■	■															
24	Shell of centrifugal fan, down	7 739 831 832	■	■															
25	Centrifugal fan	8 733 501 253	■	■															
26	Shell of centrifugal fan	7 739 836 235	■	■															
27	Protection grille	8 733 501 639	■	■															
28	Air filter	7 739 831 885	■	■															
29	Strengthen rib of grille	7 739 831 884	■	■															
30	Grille clamp	7 739 831 826	■	■															
31	Return air grille	7 739 831 886	■	■															
32	Panel	8 733 501 602	■	■															
33	Display board	8 733 501 335	■	■															
34	Display board	8 733 501 337	■	■															
35	Compressor wiring cable	8 733 501 277	■	■															
36	Board assembly	7 739 834 812	■	■															
37	Cover of motor, left	7 739 831 538	■	■															
38	Brushless DC motor	7 739 836 274	■	■															
39	Cover of motor, right	7 739 831 541	■	■															
40	Shaft	7 739 831 887	■	■															
41	Bearing	7 739 831 455	■	■															
42	Bearing base	7 739 831 638	■	■															
43	Mounting base of bearing	7 739 831 639	■	■															
44	Supporter	7 739 831 883	■	■															
45	Foam of air outlet frame	7 739 836 298	■	■															
46	Foam of air outlet frame	7 739 836 243	■	■															
47	Foam of air outlet frame	7 739 836 244	■	■															
48	Air outlet frame assembly	7 739 831 878	■	■															
49	Step motor	7 739 831 474	■	■															
50	Step motor	7 739 831 866	■	■															
51	Drainage water pan	7 739 836 289	■	■															
52	Beam, middle	7 739 831 881	■	■															

AF-CF 80-1 7 733 701 493

AF-CF 90-1 7 733 701 494

Spare parts list

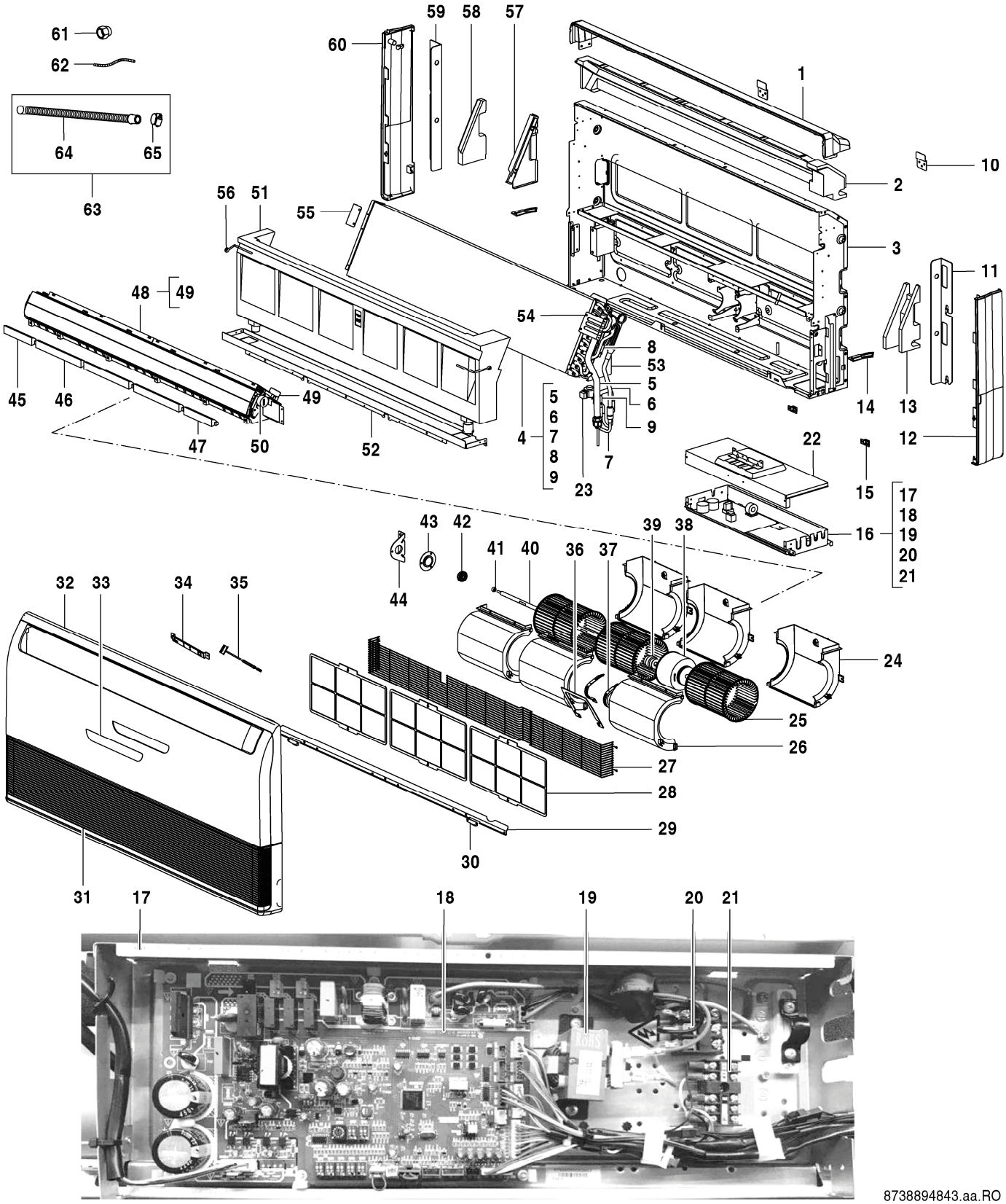

AF-CF 80-1	7 733 701 493
AF-CF 90-1	7 733 701 494

Pos	Description	Ordering no.	CF 80-1	CF 90-1															Remarks
53	Mounting plate of evaporator	7 739 831 853	■	■															
54	Mounting plate of heat exchanger	7 739 831 863	■	■															
55	Mounting plate of heat exchanger	7 739 831 859	■	■															
56	Fixing cable of drainage water pan	7 739 831 849	■	■															
57	Foam	7 739 836 240	■	■															
58	Mounting plate of evaporator	7 739 831 850	■	■															
59	Mounting plate	7 739 831 860	■	■															
60	Cover	7 739 831 858	■	■															
61	Copper nut	7 739 836 168	■	■															
62	Room temperature sensor	7 739 834 401	■	■															
63	Accessory package	7 739 836 233	■	■															
64	Drainage pipe	7 739 831 834	■	■															
65	Drainage pipe clip	8 733 501 341	■	■															
	CCB (400mm, SELV adapter)	8 750 501 441	■	■															
	Connection cable AF-IDU	8 750 501 446	■	■															

AF-CF 80-1	7 733 701 493
AF-CF 90-1	7 733 701 494

Spare parts list

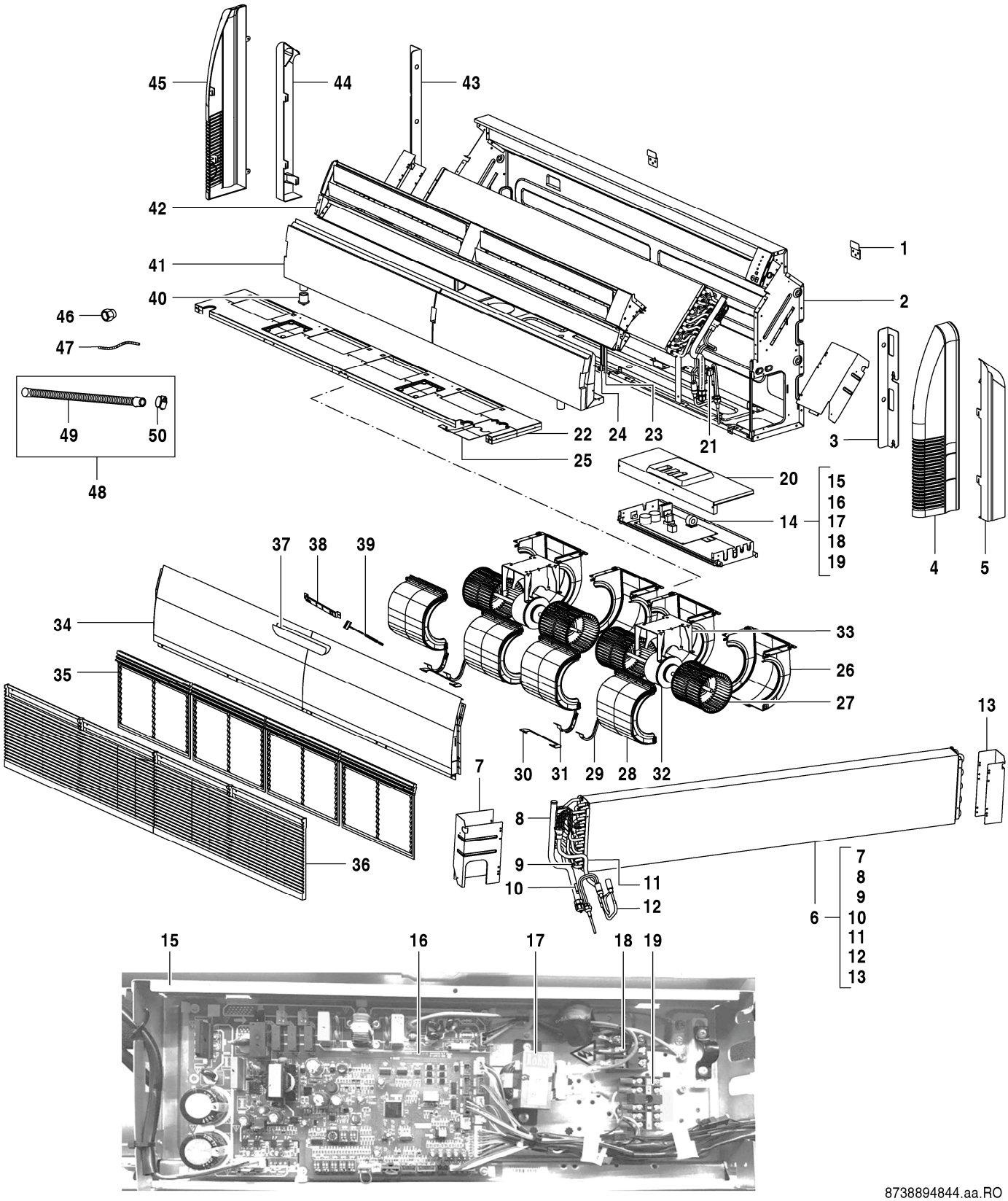

AF-CF 112-1	7 733 701 495
AF-CF 140-1	7 733 701 496

Pos	Description	Ordering no.	CF 112-1	CF 140-1															Remarks
1	Mounting base	7 739 836 226	■	■															
2	Chassis assembly	8 733 501 255	■	■															
3	Mounting plate	7 739 831 864	■	■															
4	Cover	7 739 831 899	■	■															
5	Plate for sealing	7 739 831 898	■	■															
6	Evaporator assembly	8 733 501 439	■	■															
7	Mounting plate of heat exchanger	8 733 501 583	■	■															
8	Evaporator outlet pipe assembly	7 739 836 256	■	■															
9	Pipe temperature sensor	7 739 831 147	■	■															
10	Pipe temperature sensor	7 739 834 388	■	■															
11	Evaporator inlet pipe assembly	7 739 836 255	■	■															
12	EXV valve body	7 739 831 062	■	■															
13	Mounting plate of heat exchanger	8 733 501 584	■	■															
14	E-part box with electronic components	8 733 501 389	■	■															
15	E-part box housing	7 739 836 231	■	■															
16	Indoor unit main PCB	8 733 501 544	■	■															
17	Reactor	8 733 501 651	■	■															
18	Wiring terminal	7 739 831 566	■	■															
19	Wiring terminal	8 733 501 716	■	■															
20	Cover of E-part box	7 739 831 921	■	■															
21	EXV valve coil	7 739 831 358	■	■															
22	Beam, middle	7 739 836 247	■	■															
23	Supporter	7 739 831 905	■	■															
24	Supporter	7 739 831 908	■	■															
25	Display board installation support	7 739 831 902	■	■															
26	Shell of centrifugal fan, down	7 739 831 907	■	■															
27	Centrifugal fan	7 739 831 911	■	■															
28	Shell of centrifugal fan, up	7 739 831 906	■	■															
29	Cover of motor, left	7 739 831 538	■	■															
30	Board assembly	7 739 834 812	■	■															
31	Cover of motor, right	7 739 831 541	■	■															
32	Brushless DC motor	7 739 834 661	■	■															
33	Bracket of motor	7 739 836 251	■	■															
34	Cover	8 733 501 311	■	■															
35	Air filter	7 739 831 909	■	■															
36	Return air grille	7 739 831 910	■	■															
37	Display board	8 733 501 335	■	■															
38	Display board	8 733 501 337	■	■															
39	Compressor wiring cable	8 733 501 277	■	■															
40	Cover of drainage outlet	7 739 831 903	■	■															
41	Drainage water pan	7 739 836 252	■	■															
42	Air outlet frame assembly	7 739 836 245	■	■															
43	Mounting plate	7 739 831 860	■	■															
44	Plate for sealing	7 739 831 923	■	■															
45	Cover, right	7 739 831 922	■	■															
46	Copper nut	7 739 836 168	■	■															
47	Outdoor temperature sensor	8 733 501 655	■	■															
48	Accessory package	7 739 836 233	■	■															
49	Drainage pipe	7 739 831 834	■	■															
50	Drainage pipe clip	8 733 501 341	■	■															
	CCB (400mm, SELV adapter)	8 750 501 441	■	■															
	Connection cable AF-IDU	8 750 501 446	■	■															

AF-CF 112-1	7 733 701 495
AF-CF 140-1	7 733 701 496

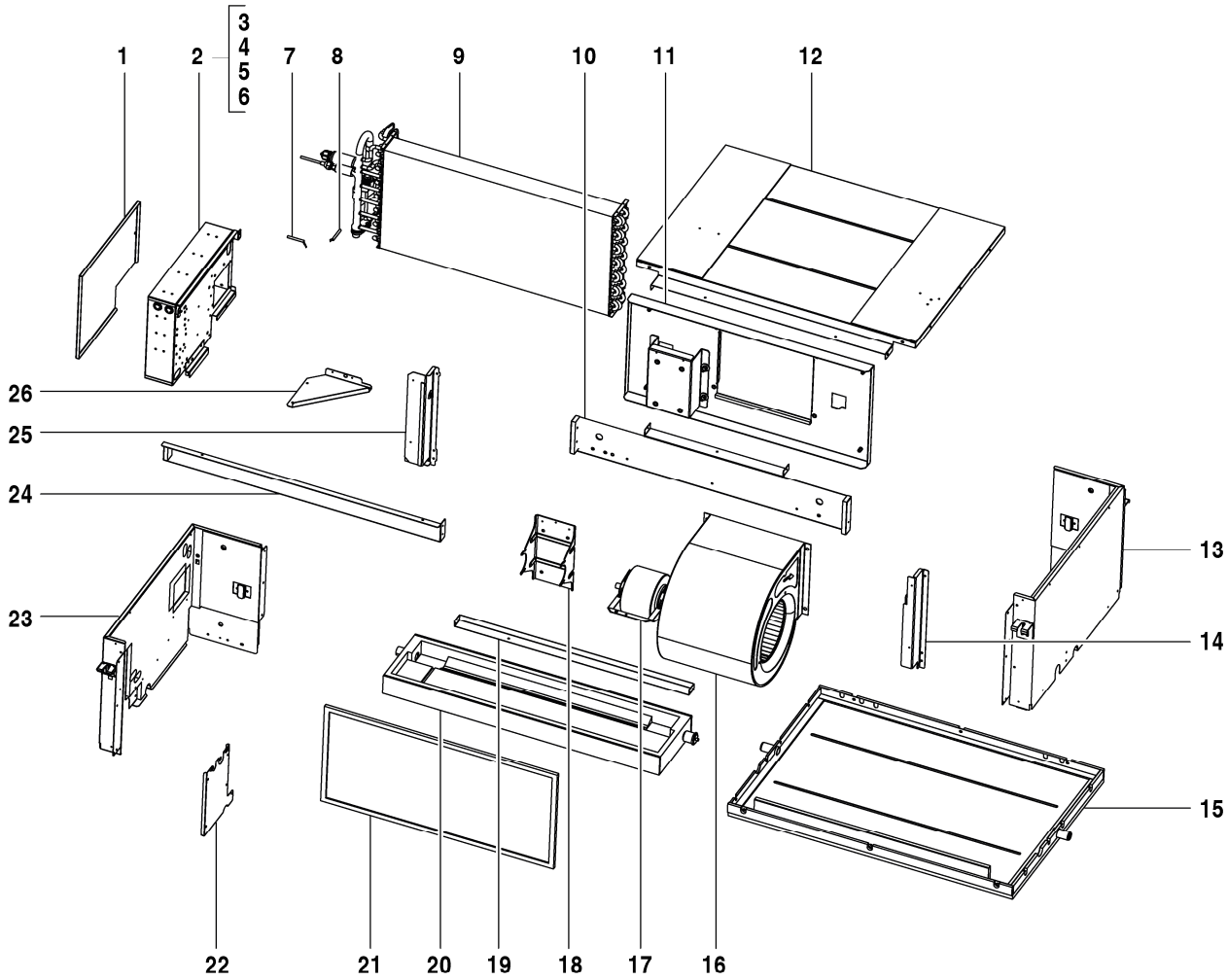

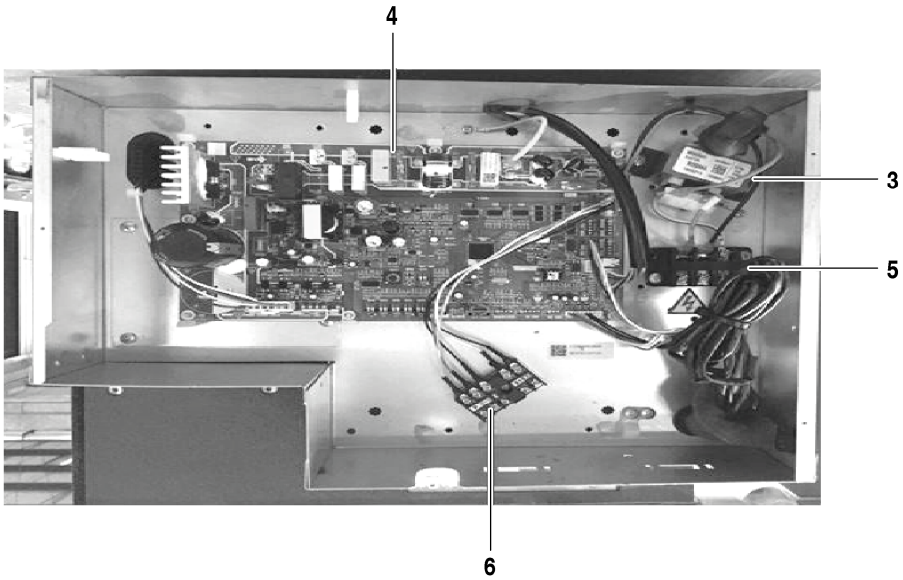

8738894954.aa.RO

AF-DH 71-1	7 733 700 947
AF-DH 80-1	7 733 700 948

Pos	Description	Ordering no.	DH 71-1	DH 80-1															Remarks
1	Cover of E-part box	7 739 834 695	■	■															
2	E-part box assembly	8 733 501 898	■	■															
3	Reactor	7 739 834 837	■	■															
4	Main PCB IDU	8 733 501 902	■	■															
5	Wiring terminal	8 733 501 716	■	■															
6	Wiring terminal	7 739 831 674	■	■															
7	Room temperature sensor	7 739 831 203	■	■															
8	Pipe temperature sensor	7 739 834 388	■	■															
9	Evaporator assembly	8 733 501 900	■	■															
10	Side plate assembly, front	7 739 831 708	■	■															
11	Mounting base of fan and motor	8 733 501 903	■	■															
12	Cover, top	7 739 836 315	■	■															
13	Side plate assembly, left	7 739 831 711	■	■															
14	Mounting plate of evaporator	7 739 836 316	■	■															
15	Chassis assembly	7 739 836 317	■	■															
16	Centrifugal fan	8 733 501 897	■	■															
17	Brushless DC motor	8 733 501 896	■	■															
18	Supporter	7 739 834 804	■	■															
19	Side plate assembly, rear	7 739 831 717	■	■															
20	Drainage water pan	7 739 831 718	■	■															
21	Air Filter	7 739 831 716	■	■															
22	Cover of pipe	7 739 831 719	■	■															
23	Side plate assembly, right	8 733 501 676	■	■															
24	Beam assembly	7 739 831 722	■	■															
25	Mounting plate of evaporator	7 739 831 723	■	■															
26	Strengthen board	7 739 836 324	■	■															
	CCB (400mm, SELV adapter)	8 750 501 441	■	■															
	Connection cable AF-IDU	8 750 501 446	■	■															

AF-DH 71-1	7 733 700 947
AF-DH 80-1	7 733 700 948

Spare parts list

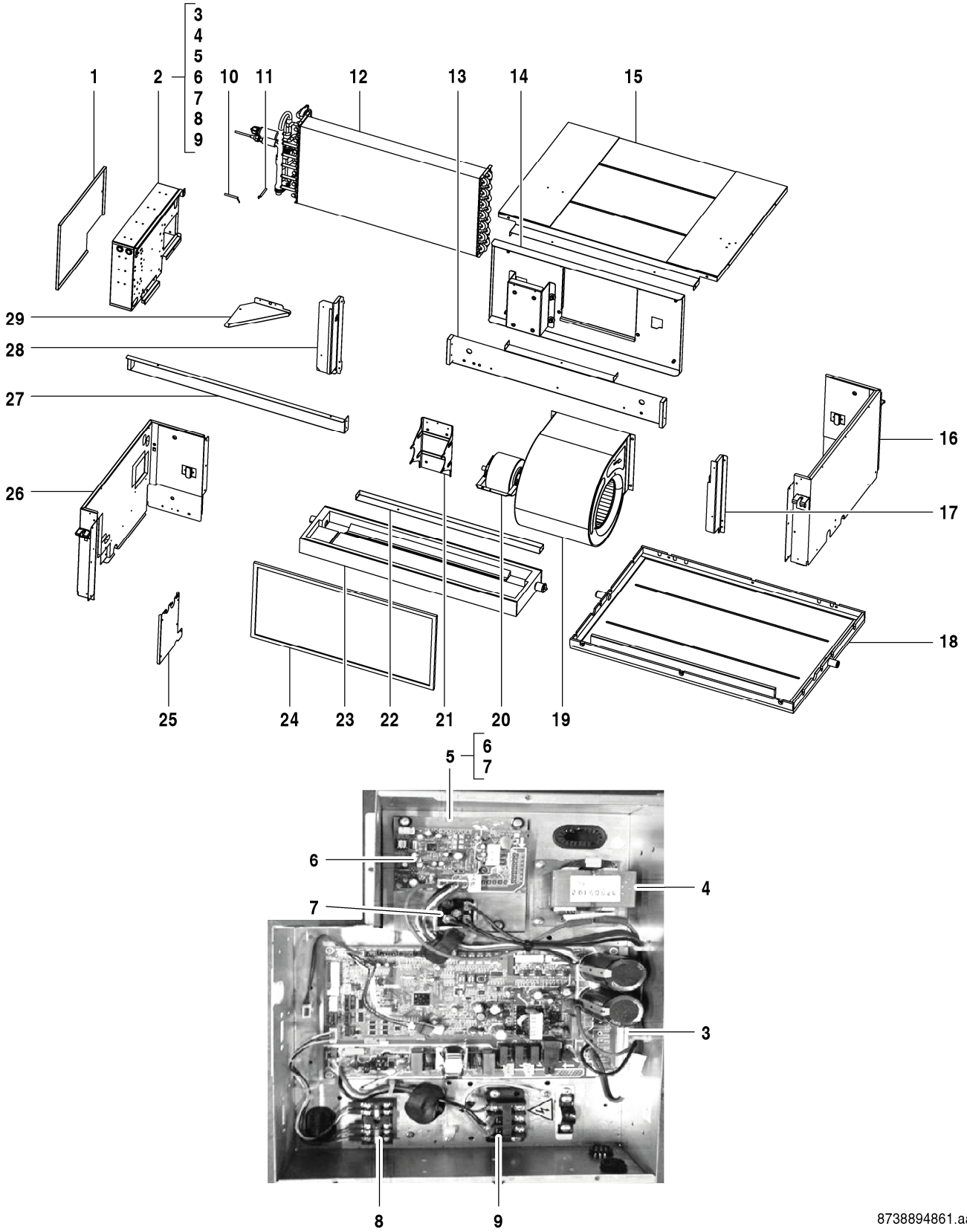

AF-DH 90-1	7 733 700 949
AF-DH 112-1	7 733 700 950

Pos	Description	Ordering no.	DH 90-1	DH 112-1															Remarks
1	Cover of E-part box	7 739 834 695	■	■															
2	E-part box with electronic components	8 733 501 395	■	■															
3	Indoor unit main PCB	8 733 501 547	■	■															
4	Reactor	7 739 834 838	■	■															
5	Radiator	8 733 501 645	■	■															
6	Rectifier bridge	7 739 831 114	■	■															
7	Fan module	8 733 501 513	■	■															
8	Wiring terminal	8 733 501 716	■	■															
9	Wiring terminal	7 739 831 674	■	■															
10	Room temperature sensor	7 739 831 203	■	■															
11	Pipe temperature sensor	7 739 834 388	■	■															
12	Evaporator assembly	7 739 831 725	■	■															
13	Side plate assembly, front	7 739 831 708	■	■															
14	Mounting base of fan and motor	7 739 836 334	■	■															
15	Cover, top	7 739 836 315	■	■															
16	Side plate assembly, left	7 739 831 711	■	■															
17	Mounting plate of evaporator	7 739 836 316	■	■															
18	Chassis assembly	7 739 836 317	■	■															
19	Centrifugal fan	7 739 834 636	■	■															
20	Brushless DC motor	7 739 836 336	■	■															
21	Supporter	7 739 834 804	■	■															
22	Side plate assembly, rear	7 739 831 717	■	■															
23	Drainage water pan	7 739 831 718	■	■															
24	Air Filter	7 739 831 716	■	■															
25	Cover of pipe	7 739 831 719	■	■															
26	Side plate assembly, right	8 733 501 676	■	■															
27	Beam assembly	7 739 831 722	■	■															
28	Mounting plate of evaporator	7 739 831 723	■	■															
29	Strengthen board	7 739 836 324	■	■															
	CCB (400mm, SELV adapter)	8 750 501 441	■	■															
	Connection cable AF-IDU	8 750 501 446	■	■															

AF-DH 90-1	7 733 700 949
AF-DH 112-1	7 733 700 950

Spare parts list

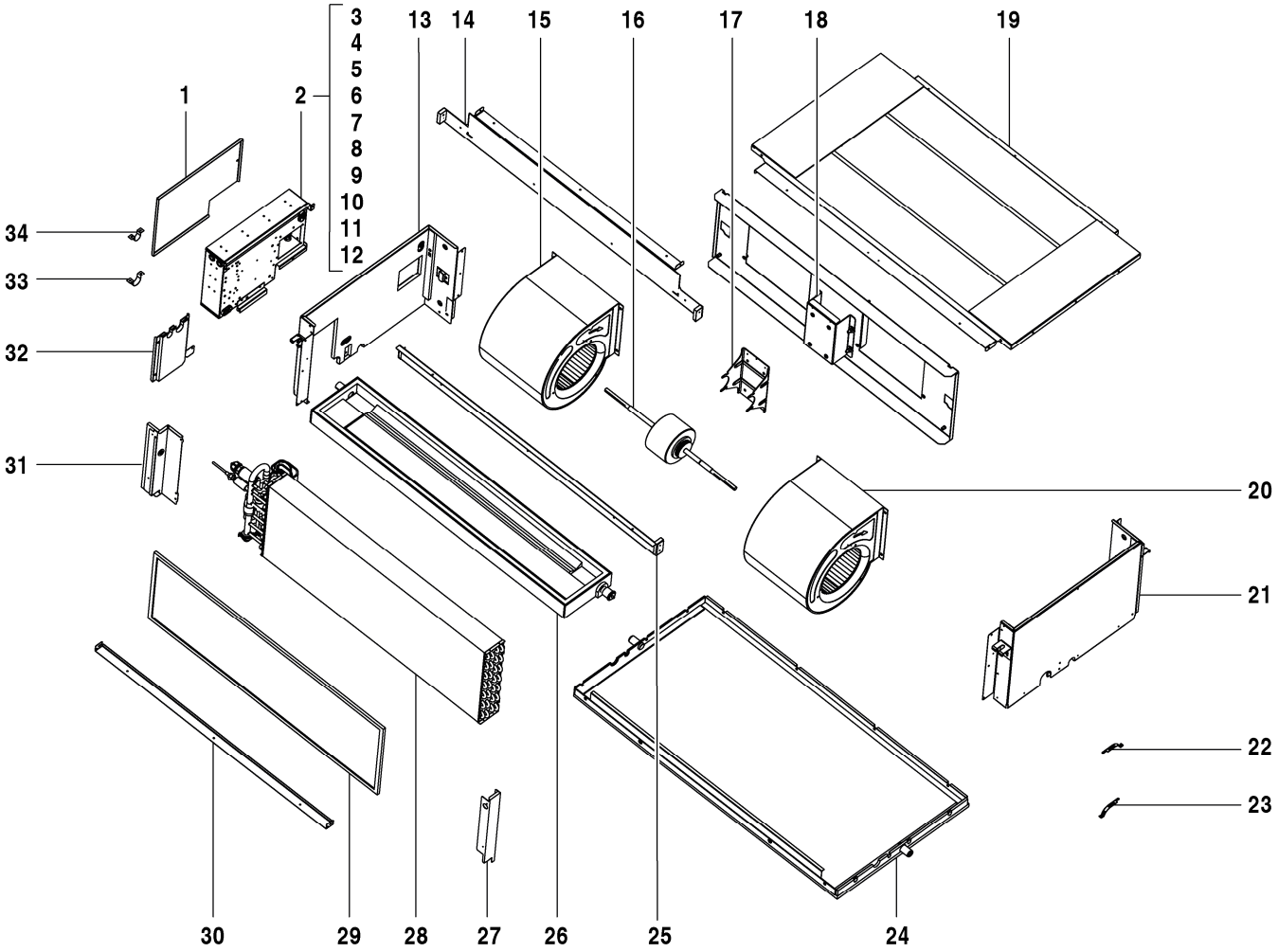

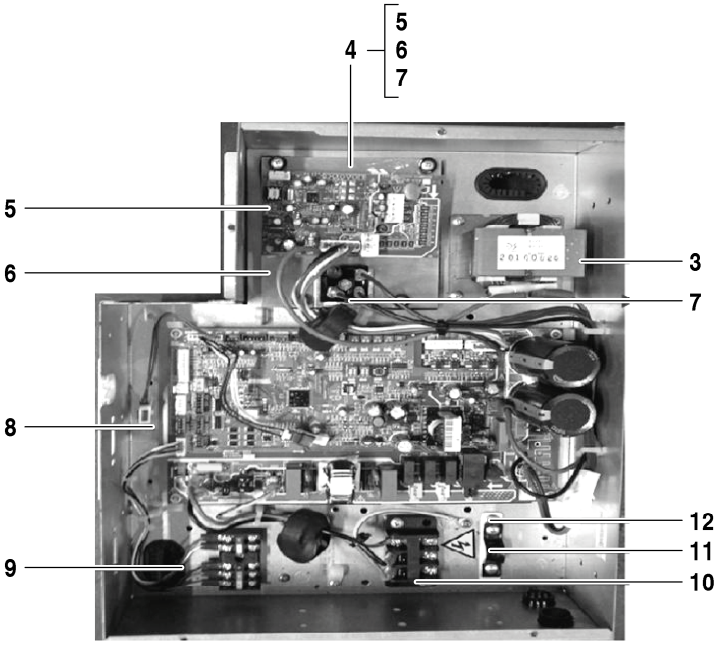

8738894862.aa.RO

AF-DH 140-1	7 733 700 951
AF-DH 160-1	7 733 700 952

Pos	Description	Ordering no.	DH 140-1	DH 160-1															Remarks
1	Cover of E-part box	7 739 834 695	■	■															
2	E-part box with electronic components	8 733 501 390	■	■															
3	Reactor	7 739 834 838	■	■															
4	Radiator	8 733 501 645	■	■															
5	Fan module	8 733 501 513	■	■															
6	Radiator	8 733 501 643	■	■															
7	Rectifier bridge	7 739 831 114	■	■															
8	Indoor unit main PCB	8 733 501 547	■	■															
9	Wiring terminal	8 733 501 716	■	■															
10	Wiring terminal	7 739 831 674	■	■															
11	Cable clip	7 739 834 640	■	■															
12	Wiring plate	7 739 834 781	■	■															
13	Side plate assembly, right	8 733 501 677	■	■															
14	Side plate assembly, front	7 739 831 744	■	■															
15	Centrifugal fan	7 739 834 635	■	■															
16	Brushless DC motor	7 739 834 801	■	■															
17	Supporter	7 739 834 804	■	■															
18	Mounting base of fan and motor	7 739 834 743	■	■															
19	Cover, top	7 739 834 869	■	■															
20	Centrifugal fan	7 739 834 636	■	■															
21	Side plate assembly, left	7 739 834 782	■	■															
22	Pipe temperature sensor	7 739 834 388	■	■															
23	Room temperature sensor	7 739 831 203	■	■															
24	Chassis assembly	8 733 501 260	■	■															
25	Beam assembly	7 739 831 746	■	■															
26	Drainage water pan	7 739 831 747	■	■															
27	Mounting plate of evaporator	7 739 834 854	■	■															
28	Evaporator assembly	7 739 831 749	■	■															
29	Air Filter	7 739 831 751	■	■															
30	Side plate assembly, rear	7 739 831 752	■	■															
31	Mounting plate of evaporator	7 739 831 753	■	■															
32	Cover of pipe	7 739 831 719	■	■															
33	Supporter	7 739 831 754	■	■															
34	Pipe fixing clamp	7 739 831 755	■	■															
	CCB (400mm, SELV adapter)	8 750 501 441	■	■															
	Connection cable AF-IDU	8 750 501 446	■	■															

AF-DH 140-1 7 733 700 951

AF-DH 160-1 7 733 700 952

Spare parts list

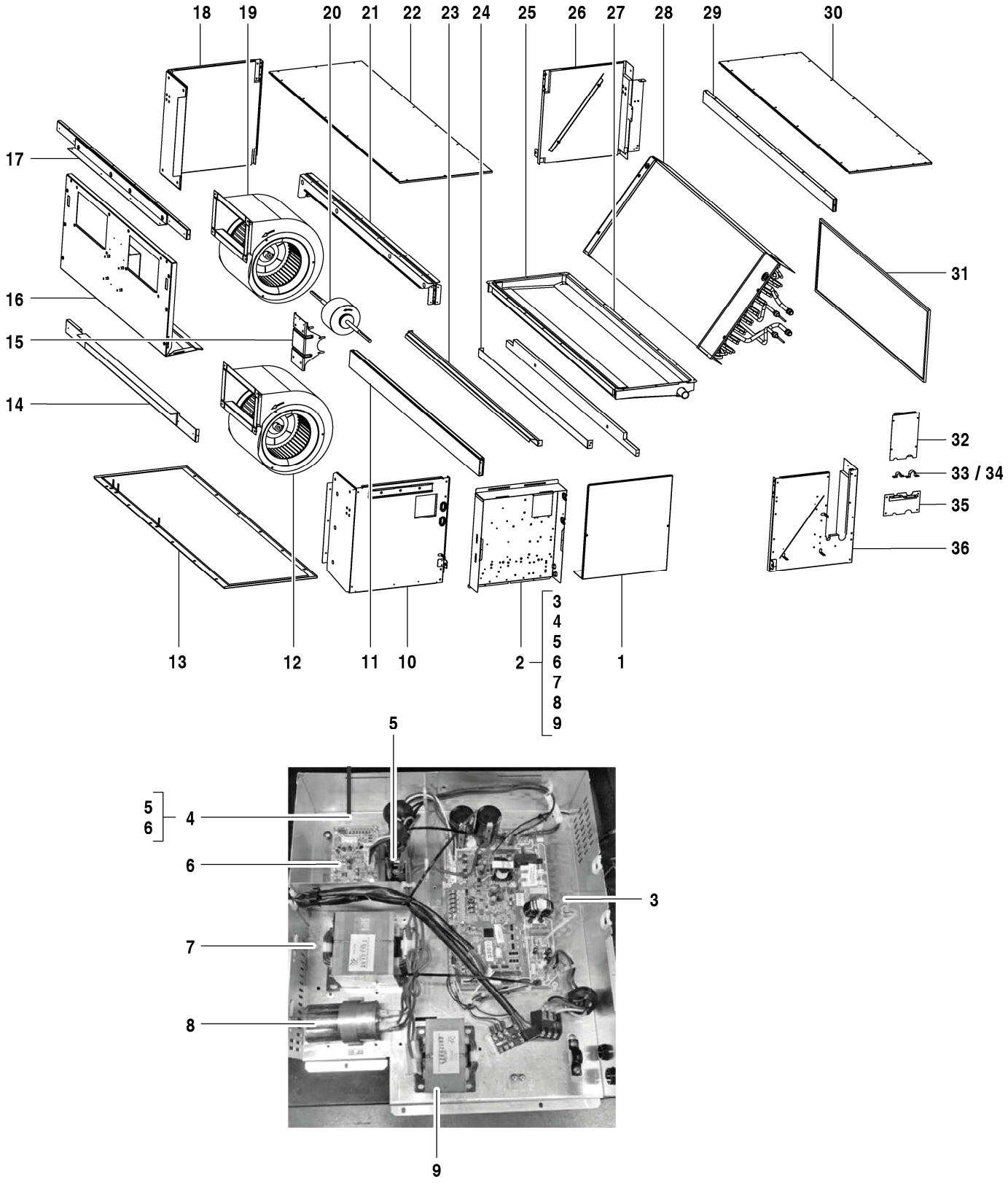

8738894863.aa.RO

AF-DH 200-1	7 733 700 953
AF-DH 250-1	7 733 700 954
AF-DH 280-1	7 733 700 955

Pos	Description	Ordering no.	DH 200-1	DH 250-1	DH 280-1														Remarks
1	Cover of E-part box	8 733 501 317	■	■	■														
2	E-part box with electronic components	8 733 501 393	■	■	■														
3	Indoor unit main PCB	8 733 501 549	■	■	■														
4	Radiator	8 733 501 646	■	■	■														
5	Rectifier bridge	7 739 831 114	■	■	■														
6	Fan module	8 733 501 512	■	■	■														
7	Reactor	8 733 501 652	■	■	■														
8	Capacitor	8 733 501 250	■	■	■														
9	Reactor	8 733 501 647	■	■	■														
10	Side plate assembly, right	8 733 501 675	■	■	■														
11	Board assembly	7 739 831 760	■	■	■														
12	Centrifugal fan	7 739 834 637	■	■	■														
13	Chassis assembly	8 733 501 259	■	■	■														
14	Flange assembly	7 739 831 784	■	■	■														
15	Supporter	8 733 501 699	■	■	■														
16	Mounting base of fan and motor	8 733 501 580	■	■	■														
17	Flange assembly	7 739 834 759	■	■	■														
18	Side plate assembly, left	7 739 834 783	■	■	■														
19	Shell of centrifugal fan	7 739 834 642	■	■	■														
20	Brushless DC motor	8 733 501 248	■	■	■														
21	Beam assembly	7 739 834 623	■	■	■														
22	Cover, top	7 739 834 870	■	■	■														
23	Board assembly	7 739 831 779	■	■	■														
24	Flange assembly	7 739 831 784	■	■	■														
25	Drainage water pan	7 739 831 770	■	■	■														
26	Side plate assembly, left	7 739 831 766	■	■	■														
27	Drainage water pan	7 739 831 778	■	■	■														
28	Evaporator assembly	8 733 501 440	■	■	■														
29	Flange assembly	7 739 834 760	■	■	■														
30	Cover, top	7 739 831 764	■	■	■														
31	Air filter	8 733 501 211	■	■	■														
32	Pipe clamp assembly	8 733 501 617	■	■	■														
33	Supporter	7 739 831 754	■	■	■														
34	Pipe fixing clamp	7 739 831 755	■	■	■														
35	Pipe clamp assembly	8 733 501 618	■	■	■														
36	Side plate assembly, right	8 733 501 678	■	■	■														
	CCB (400mm, SELV adapter)	8 750 501 441	■	■	■														
	Connection cable AF-IDU	8 750 501 446	■	■	■														

AF-DH 200-1	7 733 700 953
AF-DH 250-1	7 733 700 954
AF-DH 280-1	7 733 700 955

Spare parts list

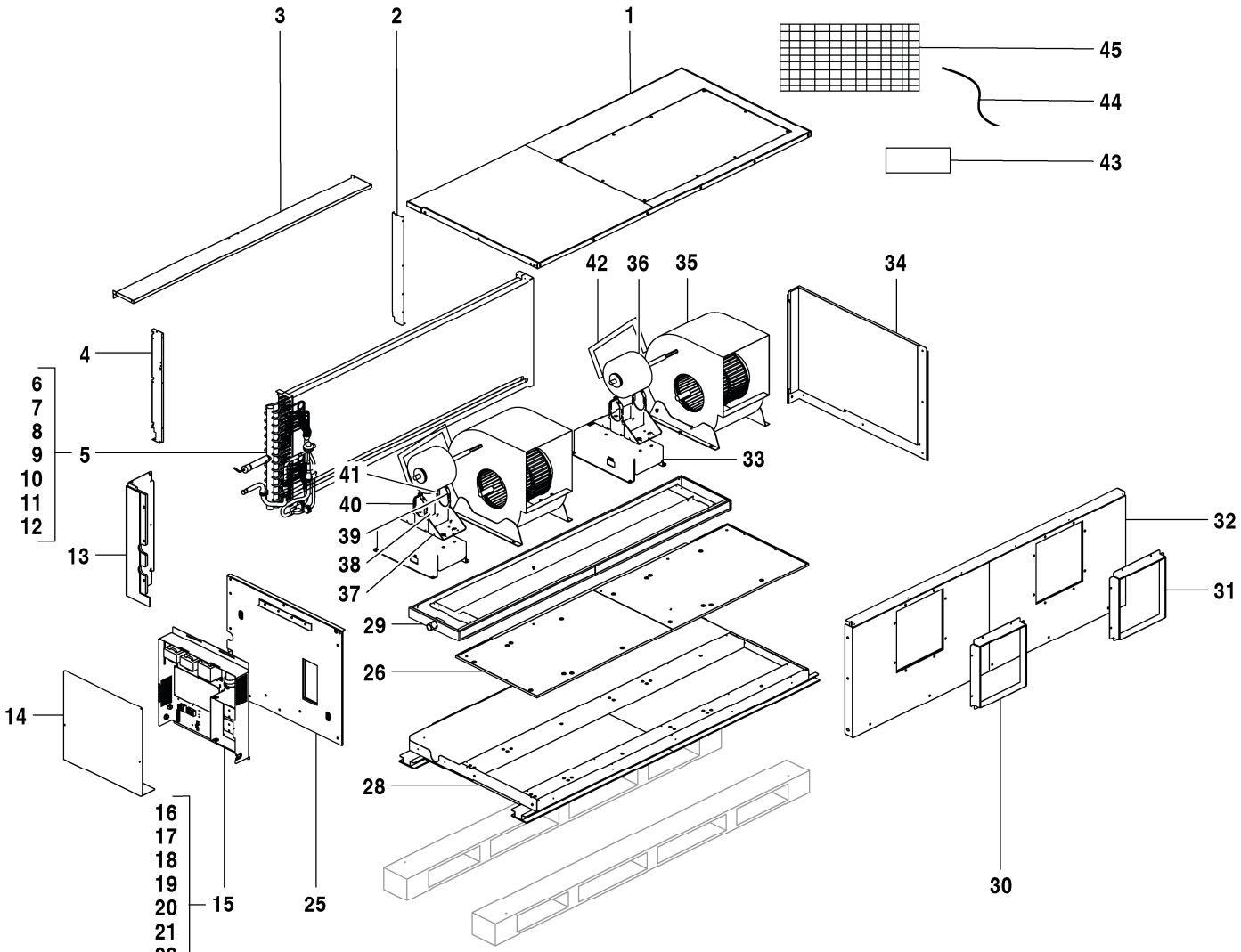

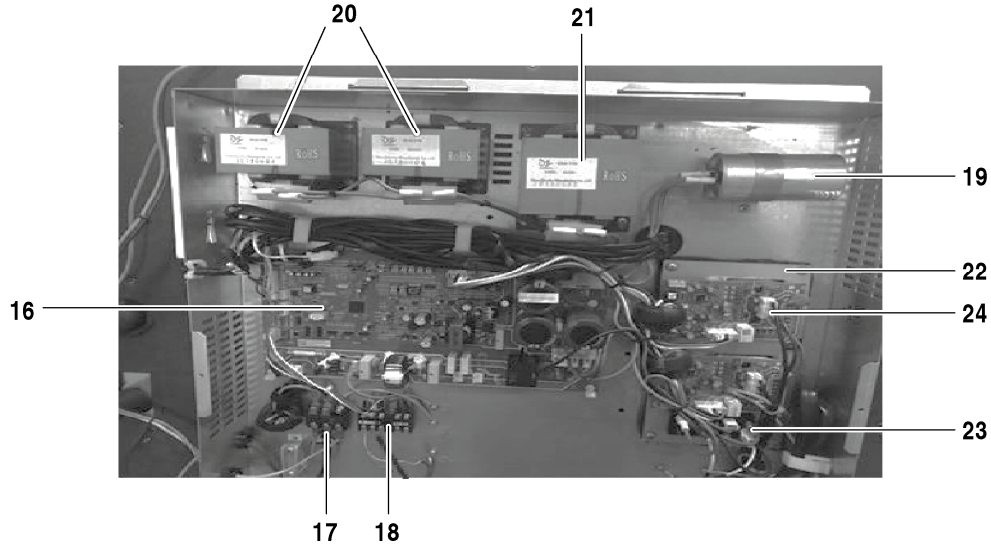

6721903756.ab.RO

AF-DH 400-1 7 733 700 956

Pos	Description	Ordering no.	AF-DH 400-1																	Remarks
1	Top cover assembly	8 750 501 515	■																	
2	Evaporator sealplate	8 750 501 516	■																	
3	Evaporator bracket	8 750 501 517	■																	
4	Evaporator sealplate	8 750 501 518	■																	
5	Evaporator assembly	8 750 501 519	■																	
6	Evaporator output pipe assembly	8 750 501 520	■																	
7	Pipe temperature sensor	7 739 831 147	■																	
8	Pipe temperature sensor	8 733 501 621	■																	
9	Evaporator input pipe assembly	8 750 501 521	■																	
10	Electric throttle assembly	8 750 501 522	■																	
11	EXV valve body	8 733 501 503	■																	
12	EXV valve coil	8 733 501 506	■																	
13	Rear panel part	8 750 501 523	■																	
14	Electric control box cover	8 750 501 524	■																	
15	E-part box assembly	8 750 501 525	■																	
16	AF-DH 40,45,56 kW main board	8 750 501 476	■																	
17	Wiring terminal	7 739 831 566	■																	
18	Wiring terminal	8 733 501 716	■																	
19	Capacitor	8 733 501 250	■																	
20	Reactor	7 739 830 850	■																	
21	Reactor	8 733 501 647	■																	
22	Radiator assembly	8 750 501 527	■																	
23	Fan module	8 733 501 512	■																	
24	Rectifier bridge	7 739 831 114	■																	
25	Side panel assembly	8 750 501 528	■																	
26	Drainage pan assembly	8 750 501 529	■																	
28	Chassis assembly	8 750 501 531	■																	
29	Drainage pan assembly	8 750 501 532	■																	
30	Flange assembly	8 750 501 533	■																	
31	Flange assembly	8 750 501 534	■																	
32	Front panel assembly	8 750 501 535	■																	
33	Motor holder	8 750 501 536	■																	
34	Side panel assembly	8 750 501 537	■																	
35	Centrifugal fan	8 750 501 538	■																	
36	Brushless DC Motor	8 750 501 539	■																	
37	Supporter	8 733 501 699	■																	
38	Motor sealing plate	8 750 501 540	■																	
39	Motor cover	8 750 501 541	■																	
40	Motor cover	8 750 501 542	■																	
41	Motor cover assembly	8 750 501 543	■																	
42	Motor cover assembly	8 750 501 544	■																	
43	water butt pipe	8 750 501 545	■																	
44	Outdoor temperature sensor	8 733 501 655	■																	
45	Display board	7 739 834 665	■																	

Spare parts list

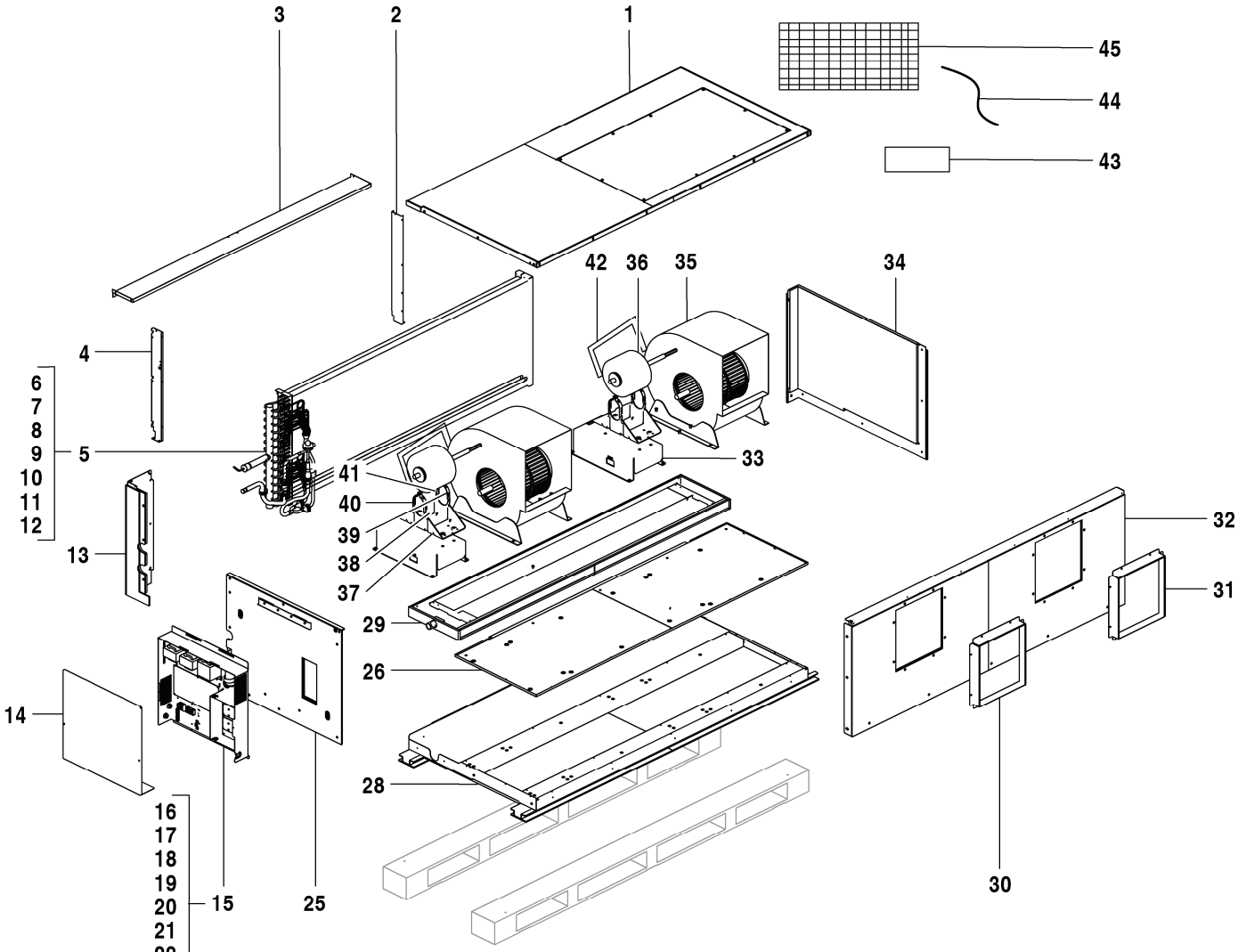

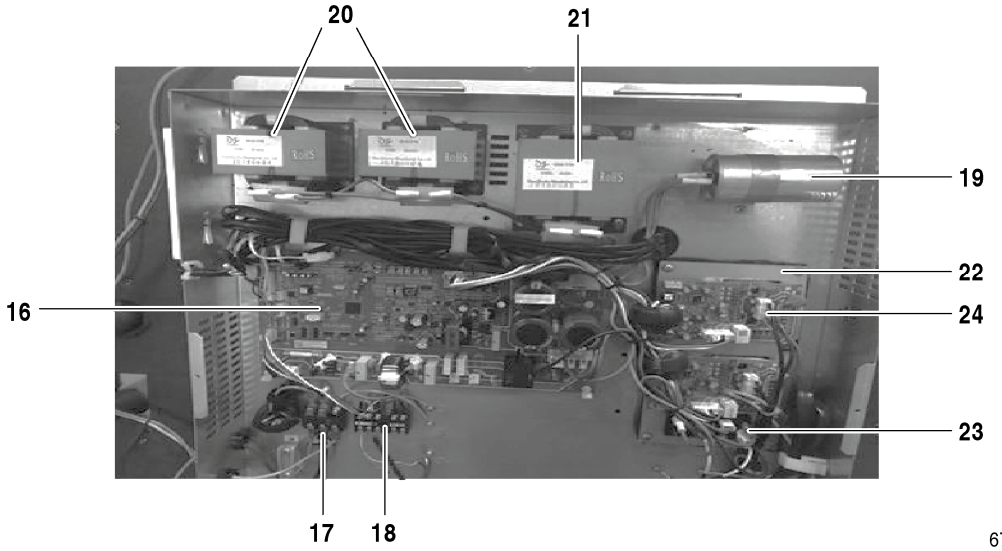

6721903757.ab.RO

AF-DH 450-1 7 733 700 957

Pos	Description	Ordering no.	AF-DH 450-1																Remarks
1	Top cover assembly	8 750 501 515	■																
2	Evaporator sealplate	8 750 501 516	■																
3	Evaporator bracket	8 750 501 517	■																
4	Evaporator sealplate	8 750 501 518	■																
5	Evaporator assembly	8 750 501 519	■																
6	Evaporator output pipe assembly	8 750 501 520	■																
7	Pipe temperature sensor	7 739 831 147	■																
8	Pipe temperature sensor	8 733 501 621	■																
9	Evaporator input pipe assembly	8 750 501 521	■																
10	Electric throttle assembly	8 750 501 522	■																
11	EXV valve body	8 733 501 503	■																
12	EXV valve coil	8 733 501 506	■																
13	Rear panel part	8 750 501 523	■																
14	Electric control box cover	8 750 501 524	■																
15	E-part box assembly	8 750 501 525	■																
16	AF-DH 40,45,56 kW main board	8 750 501 476	■																
17	Wiring terminal	7 739 831 566	■																
18	Wiring terminal	8 733 501 716	■																
19	Capacitor	8 733 501 250	■																
20	Reactor	7 739 830 850	■																
21	Reactor	8 733 501 647	■																
22	Radiator assembly	8 750 501 527	■																
23	Fan module	8 733 501 512	■																
24	Rectifier bridge	7 739 831 114	■																
25	Side panel assembly	8 750 501 528	■																
26	Drainage pan assembly	8 750 501 529	■																
28	Chassis assembly	8 750 501 531	■																
29	Drainage pan assembly	8 750 501 532	■																
30	Flange assembly	8 750 501 533	■																
31	Flange assembly	8 750 501 534	■																
32	Front panel assembly	8 750 501 535	■																
33	Motor holder	8 750 501 536	■																
34	Side panel assembly	8 750 501 537	■																
35	Centrifugal fan	8 750 501 538	■																
36	Brushless DC Motor	8 750 501 539	■																
37	Supporter	8 733 501 699	■																
38	Motor sealing plate	8 750 501 540	■																
39	Motor cover	8 750 501 541	■																
40	Motor cover	8 750 501 542	■																
41	Motor cover assembly	8 750 501 543	■																
42	Motor cover assembly	8 750 501 544	■																
43	water butt pipe	8 750 501 545	■																
44	Outdoor temperature sensor	8 733 501 655	■																
45	Display board	7 739 834 665	■																

AF-DH 450-1 7 733 700 957

Spare parts list

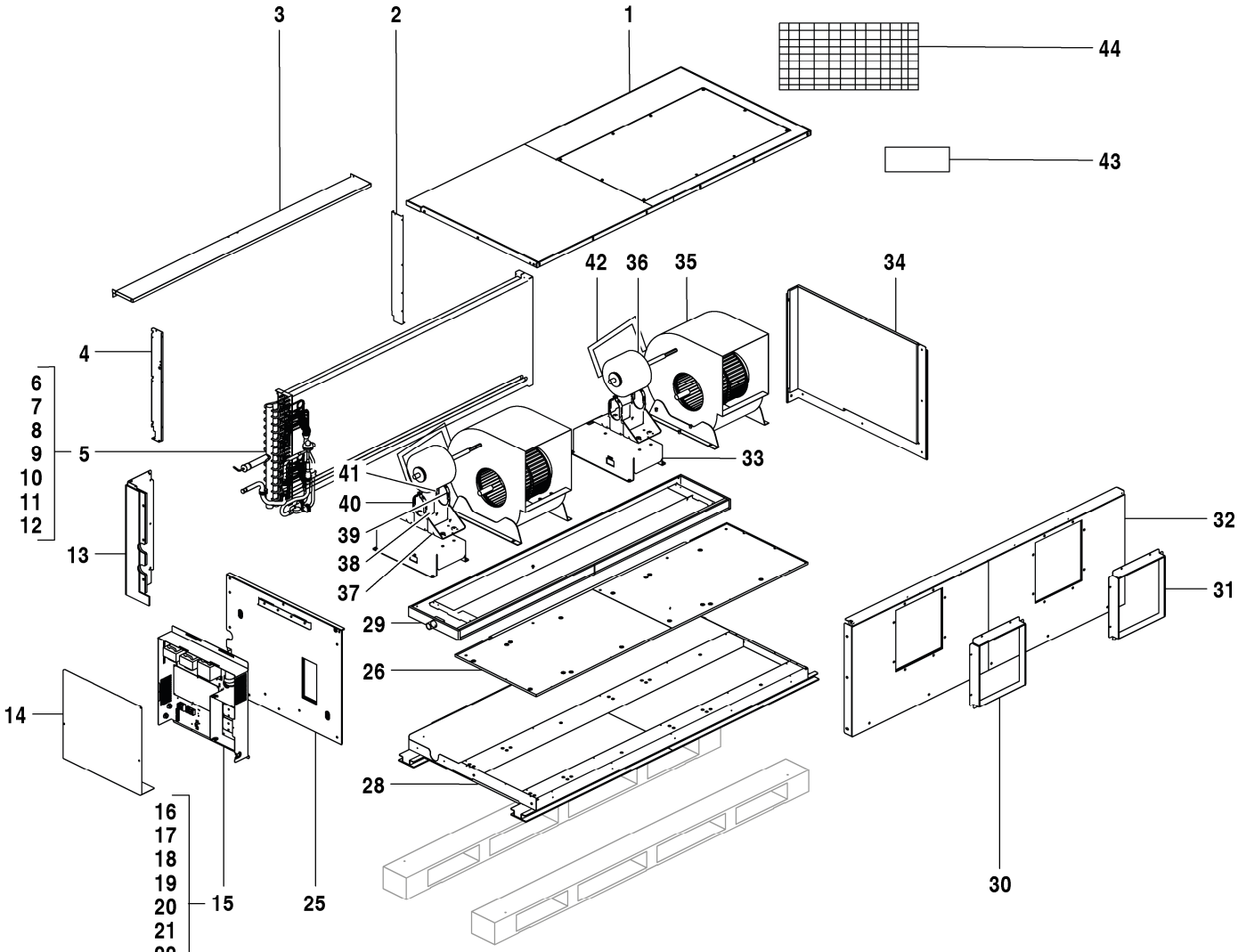

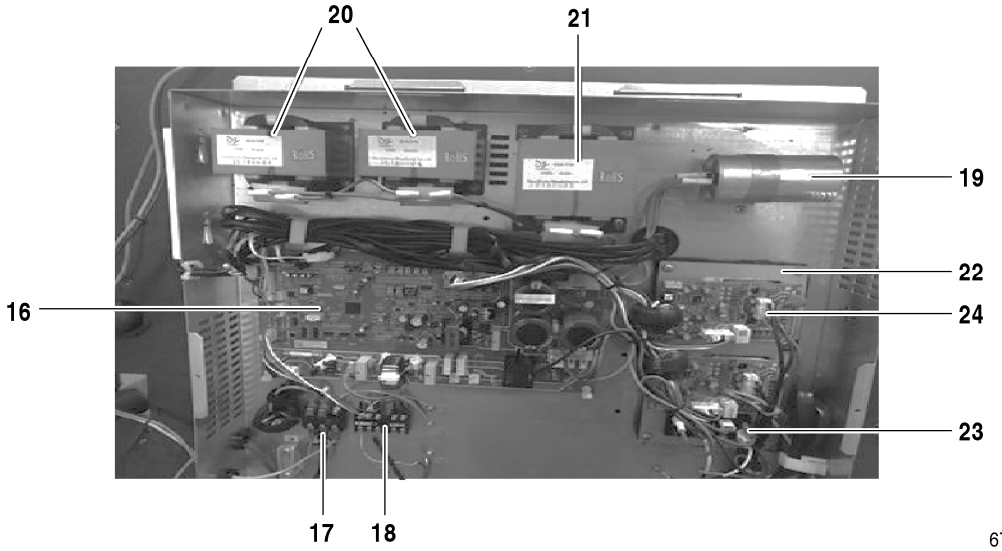

6721903758.ab.RO

AF-DH 560-1 7 733 700 958

Pos	Description	Ordering no.	AF-DH 560-1																	Remarks
1	Top cover assembly	8 750 501 515	■																	
2	Evaporator sealplate	8 750 501 516	■																	
3	Evaporator bracket	8 750 501 517	■																	
4	Evaporator sealplate	8 750 501 518	■																	
5	Evaporator assembly	8 750 501 546	■																	
6	Evaporator output pipe assembly	8 750 501 520	■																	
7	Pipe temperature sensor	7 739 831 147	■																	
8	Pipe temperature sensor	8 733 501 621	■																	
9	Evaporator input pipe assembly	8 750 501 547	■																	
10	Electric throttle assembly	8 750 501 548	■																	
11	EXV valve body	8 733 501 503	■																	
12	EXV valve coil	8 733 501 506	■																	
13	Rear panel part	8 750 501 549	■																	
14	Electric control box cover	8 750 501 524	■																	
15	E-part box assembly	8 750 501 550	■																	
16	AF-DH 40,45,56 kW main board	8 750 501 476	■																	
17	Wiring terminal	7 739 831 566	■																	
18	Wiring terminal	8 733 501 716	■																	
19	Capacitor	8 733 501 250	■																	
20	Reactor	7 739 830 850	■																	
21	Reactor	8 733 501 647	■																	
22	Radiator assembly	8 750 501 551	■																	
23	Fan module	8 733 501 512	■																	
24	Rectifier bridge	7 739 831 114	■																	
25	Side panel assembly	8 750 501 552	■																	
26	Drainage pan assembly	8 750 501 529	■																	
28	Chassis assembly	8 750 501 531	■																	
29	Drainage pan assembly	8 750 501 532	■																	
30	Flange assembly	8 750 501 533	■																	
31	Flange assembly	8 750 501 534	■																	
32	Front panel assembly	8 750 501 535	■																	
33	Motor holder	8 750 501 536	■																	
34	Side panel assembly	8 750 501 537	■																	
35	Centrifugal fan	8 750 501 538	■																	
36	Brushless DC Motor	8 750 501 539	■																	
37	Supporter	8 733 501 699	■																	
38	Motor sealing plate	8 750 501 540	■																	
39	Motor cover	8 750 501 541	■																	
40	Motor cover	8 750 501 542	■																	
41	Motor cover assembly	8 750 501 543	■																	
42	Motor cover assembly	8 750 501 544	■																	
43	water butt pipe	8 750 501 545	■																	
44	Display board	7 739 834 665	■																	

AF-DH 560-1 7 733 700 958

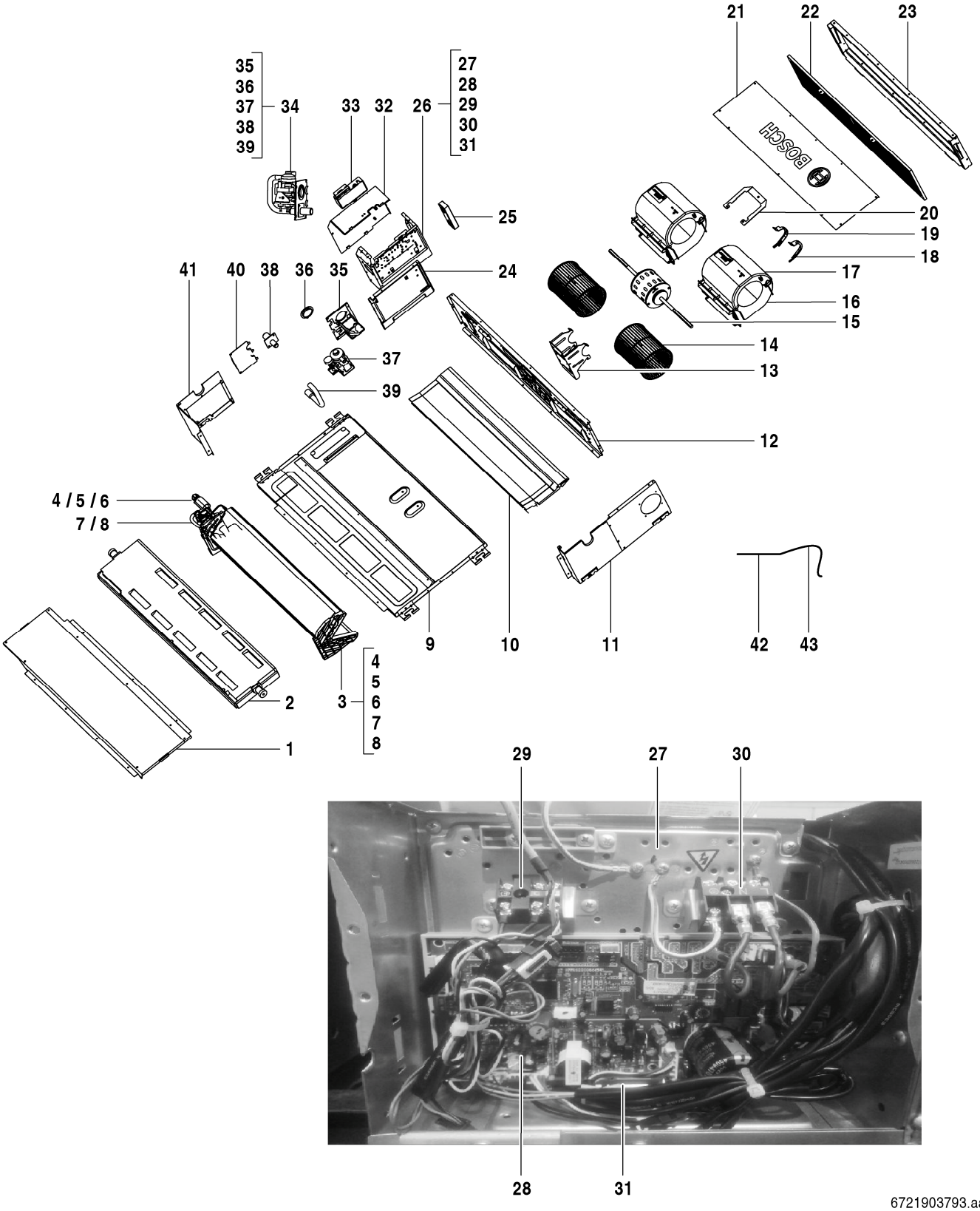
21
22
23
35
36
37
38
39
34
33
32
26
27
28
29
30
31
25
20
19
18
17
16
15
14
13
41
40
38
36
35
24
37
39
12
4 / 5 / 6
7 / 8
9
10
11
42
43
2
3
4
5
6
7
8
1
29
27
30
28
31
6721903793.aa.RO

Pos	Description	Ordering no.	AF-DHS 22-1 P																	Remarks
1	Cover, top	7 739 831 626	■																	
2	Drainage water pan	7 739 831 625	■																	
3	Evaporator assy	7 739 834 704	■																	
4	Evaporator inlet pipe	8 750 501 698	■																	
5	Expansion valve compl.	8 750 501 690	■																	
6	Expansion valve	8 750 501 691	■																	
7	Evaporator outlet pipe	8 750 501 701	■																	
8	Pipe temperature sensor	7 739 831 326	■																	
9	Foam of chassis assembly	7 739 834 762	■																	
10	Base Assy	7 739 831 623	■																	
11	Side plate assembly, left	7 739 831 579	■																	
12	Beam assy	7 739 834 622	■																	
13	Motor support	7 739 834 809	■																	
14	Centrifugal fan	7 739 834 634	■																	
15	Brushless DC motor	7 739 834 661	■																	
16	Shell of centrifugal fan, up	7 739 831 614	■																	
17	Shell of centrifugal fan, down	7 739 831 613	■																	
18	Cover of motor, left	7 739 831 538	■																	
19	Cover of motor, right	7 739 831 541	■																	
20	Board	7 739 834 629	■																	
21	Top cover	8 750 501 711	■																	
22	Filter	7 739 831 617	■																	
23	Flange assembly	7 739 831 618	■																	
24	Side plate assembly, right	7 739 831 593	■																	
25	Display	8 750 501 684	■																	
26	Control box compl	8 750 501 693	■																	
27	E-part box housing	7 739 836 397	■																	
28	Main control board	8 750 501 703	■																	
29	Connector	8 750 501 712	■																	
30	Wiring terminal	7 739 831 566	■																	
31	Frame PCB	8 750 501 705	■																	
32	CCB (400mm, SELV adapter)	8 750 501 441	■																	
33	Cover control box	8 750 501 687	■																	
34	Condensate pump compl	8 750 501 685	■																	
35	Support pump ?	8 750 501 686	■																	
36	Cover of water testing hole	7 739 831 440	■																	
37	Drainage pipe	7 739 831 315	■																	
38	Drainage pump	8 733 501 342	■																	
39	Drainage pipe	7 739 831 628	■																	
40	Pipe clamp assembly	7 739 836 416	■																	
41	Side plate assembly, right	7 739 831 591	■																	
42	Pipe temperature sensor	8 733 501 622	■																	
43	Room temperature sensor	8 733 501 653	■																	

AF-DHS 22-1 P 7 733 700 959

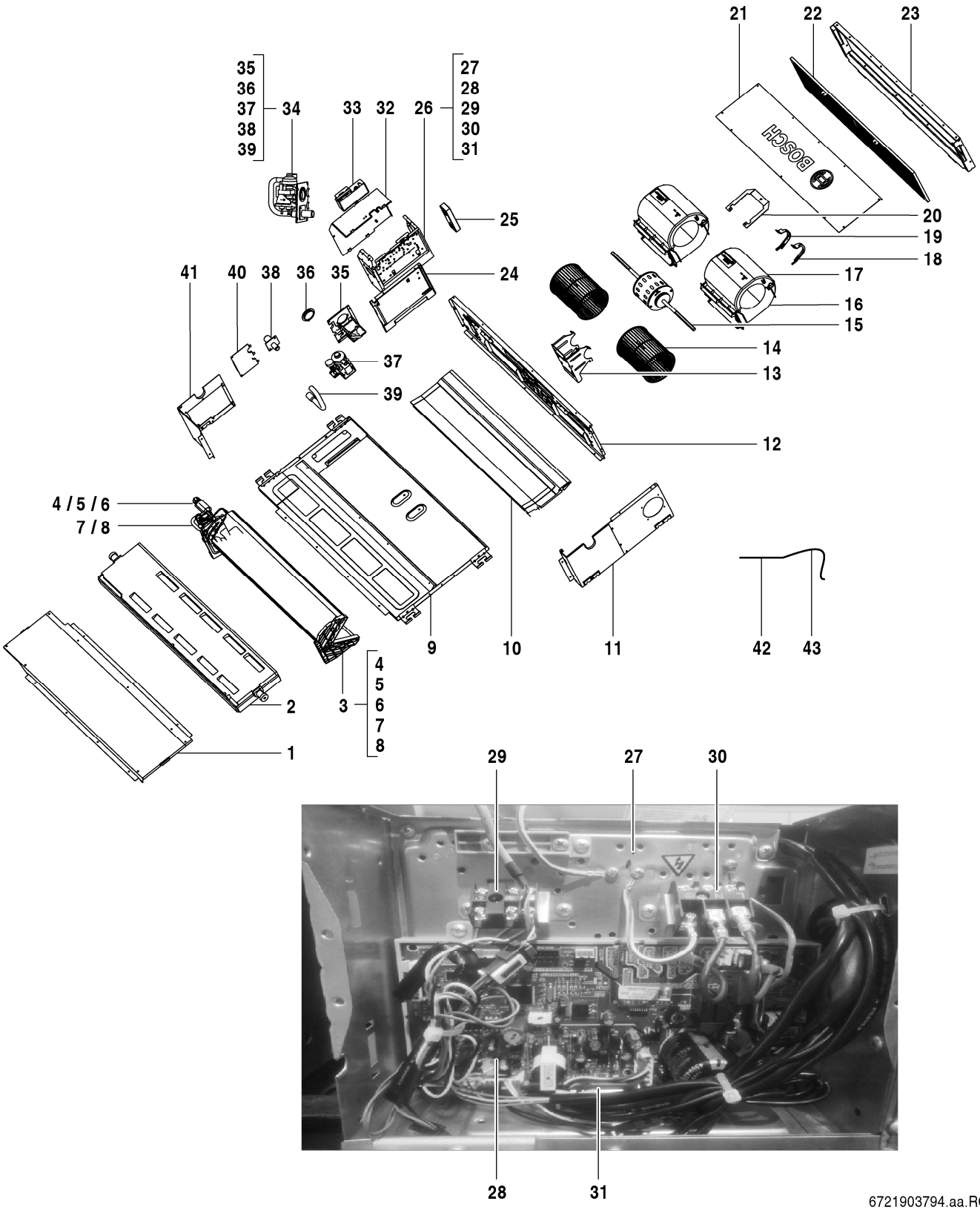
21
22
23
35
36
37
38
39
34
33
32
26
27
28
29
30
31
25
20
19
18
17
16
15
14
13
41
40
38
36
35
24
37
39
12
4 / 5 / 6
7 / 8
9
10
11
42
43
4
5
6
7
8
3
2
1
29
27
30
28
31
6721903794.aa.RO

Pos	Description	Ordering no.	AF-DHS 28-1 P																	Remarks
1	Cover, top	7 739 831 626	■																	
2	Drainage water pan	7 739 831 625	■																	
3	Evaporator assy	7 739 834 704	■																	
4	Evaporator inlet pipe	8 750 501 698	■																	
5	Expansion valve compl.	8 750 501 690	■																	
6	Expansion valve	8 750 501 691	■																	
7	Evaporator outlet pipe	8 750 501 701	■																	
8	Pipe temperature sensor	7 739 831 326	■																	
9	Foam of chassis assembly	7 739 834 762	■																	
10	Base Assy	7 739 831 623	■																	
11	Side plate assembly, left	7 739 831 579	■																	
12	Beam assy	7 739 834 622	■																	
13	Motor support	7 739 834 809	■																	
14	Centrifugal fan	7 739 834 634	■																	
15	Brushless DC motor	7 739 834 661	■																	
16	Shell of centrifugal fan, up	7 739 831 614	■																	
17	Shell of centrifugal fan, down	7 739 831 613	■																	
18	Cover of motor, left	7 739 831 538	■																	
19	Cover of motor, right	7 739 831 541	■																	
20	Board	7 739 834 629	■																	
21	Top cover	8 750 501 711	■																	
22	Filter	7 739 831 617	■																	
23	Flange assembly	7 739 831 618	■																	
24	Side plate assembly, right	7 739 831 593	■																	
25	Display	8 750 501 684	■																	
26	Control box compl	8 750 501 693	■																	
27	E-part box housing	7 739 836 397	■																	
28	Main control board	8 750 501 703	■																	
29	Connector	8 750 501 712	■																	
30	Wiring terminal	7 739 831 566	■																	
31	Frame PCB	8 750 501 705	■																	
32	CCB (400mm, SELV adapter)	8 750 501 441	■																	
33	Cover control box	8 750 501 687	■																	
34	Condensate pump compl	8 750 501 685	■																	
35	Support pump ?	8 750 501 686	■																	
36	Cover of water testing hole	7 739 831 440	■																	
37	Drainage pipe	7 739 831 315	■																	
38	Drainage pump	8 733 501 342	■																	
39	Drainage pipe	7 739 831 628	■																	
40	Pipe clamp assembly	7 739 836 416	■																	
41	Side plate assembly, right	7 739 831 591	■																	
42	Pipe temperature sensor	8 733 501 622	■																	
43	Room temperature sensor	8 733 501 653	■																	

AF-DHS 28-1 P 7 733 700 960

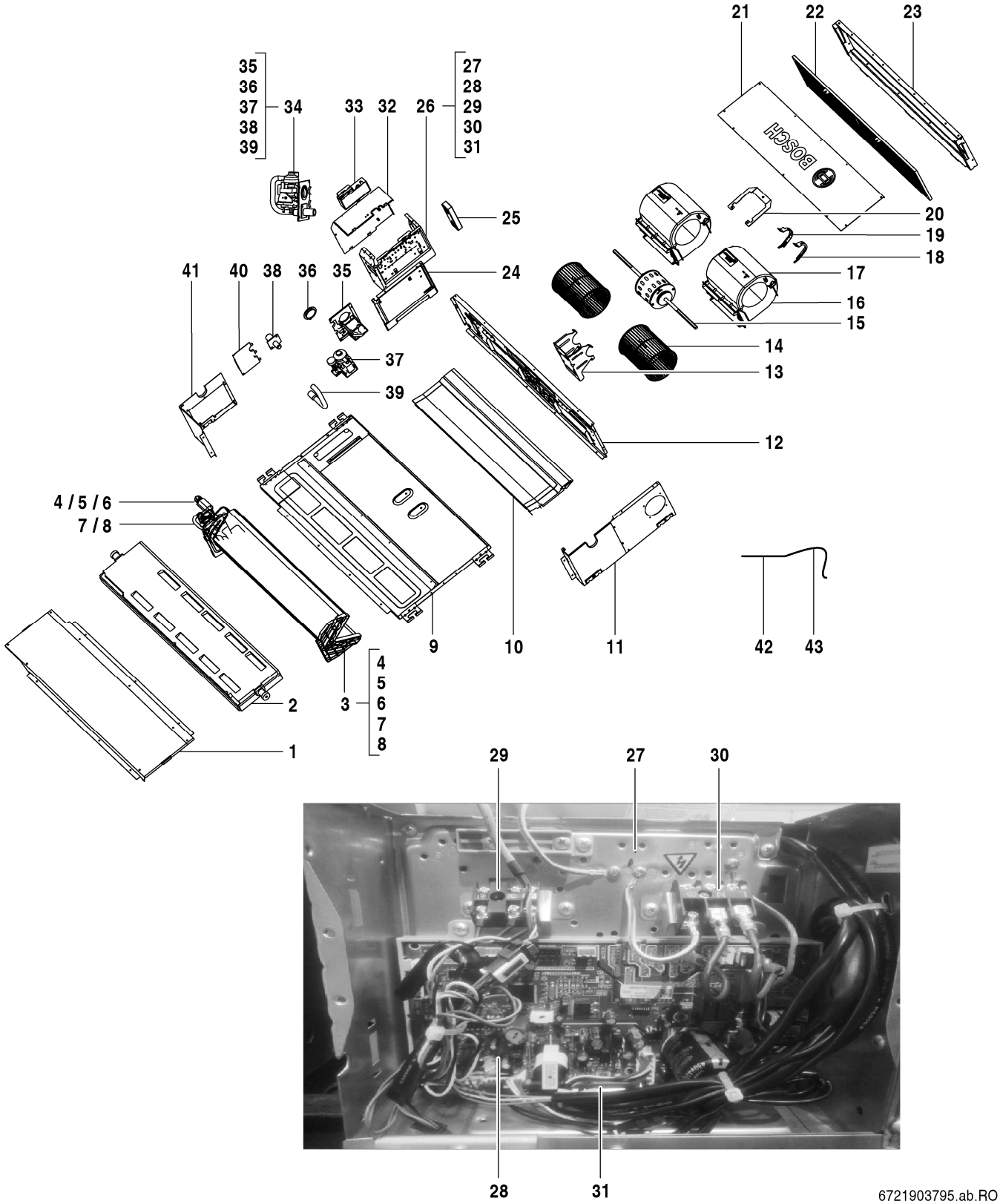
21
22
23
35
36
37
38
39
34
33
32
26
27
28
29
30
31
25
20
19
18
17
16
15
14
13
41
40
38
36
35
24
37
39
12
4 / 5 / 6
7 / 8
9
10
11
42
43
2
3
4
5
6
7
8
1
29
27
30
28
31
6721903795.ab.RO

Pos	Description	Ordering no.	AF-DHS 36-1 P																	Remarks
1	Cover, top	7 739 831 626	■																	
2	Drainage water pan	7 739 831 625	■																	
3	Evaporator compl	8 750 501 695	■																	
4	Evaporator inlet pipe assembly	7 739 836 465	■																	
5	Filter	8 733 501 515	■																	
6	Expansion valve	8 750 501 691	■																	
7	Evaporator outlet pipe assembly	7 739 836 466	■																	
8	Pipe temperature sensor	7 739 831 451	■																	
9	Foam of chassis assembly	7 739 834 762	■																	
10	Base Assy	7 739 831 623	■																	
11	Side plate assembly, left	7 739 831 579	■																	
12	Beam assy	7 739 834 622	■																	
13	Motor support	7 739 834 809	■																	
14	Centrifugal fan	7 739 834 634	■																	
15	Brushless DC motor	7 739 834 661	■																	
16	Shell of centrifugal fan, up	7 739 831 614	■																	
17	Shell of centrifugal fan, down	7 739 831 613	■																	
18	Cover of motor, left	7 739 831 538	■																	
19	Cover of motor, right	7 739 831 541	■																	
20	Board	7 739 834 629	■																	
21	Top cover	8 750 501 711	■																	
22	Filter	7 739 831 617	■																	
23	Flange assembly	7 739 831 618	■																	
24	Side plate assembly, right	7 739 831 593	■																	
25	Display	8 750 501 684	■																	
26	Control box compl	8 750 501 693	■																	
27	E-part box housing	7 739 836 397	■																	
28	Main control board	8 750 501 703	■																	
29	Connector	8 750 501 712	■																	
30	Wiring terminal	7 739 831 566	■																	
31	Frame PCB	8 750 501 705	■																	
32	CCB (400mm, SELV adapter)	8 750 501 441	■																	
33	Cover control box	8 750 501 687	■																	
34	Condensate pump compl	8 750 501 685	■																	
35	Support pump ?	8 750 501 686	■																	
36	Cover of water testing hole	7 739 831 440	■																	
37	Drainage pipe	7 739 831 315	■																	
38	Drainage pump	8 733 501 342	■																	
39	Drainage pipe	7 739 831 628	■																	
40	Pipe clamp assembly	7 739 836 416	■																	
41	Side plate assembly, right	7 739 831 591	■																	
42	Pipe temperature sensor	8 733 501 622	■																	
43	Room temperature sensor	8 733 501 653	■																	

AF-DHS 36-1 P 7 733 700 961

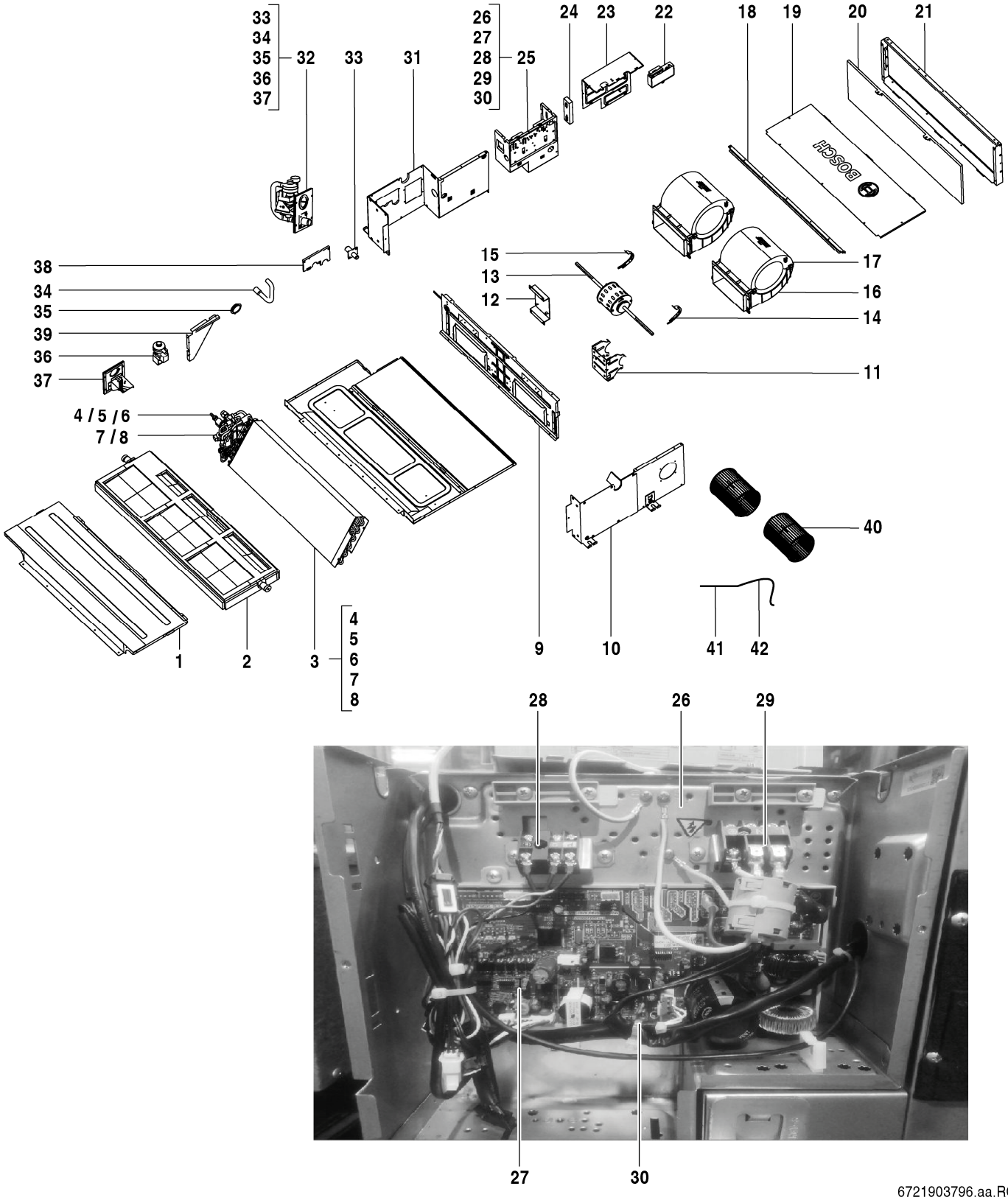

6721903796.aa.RO

Pos	Description	Ordering no.	AF-DHS 45-1 P																	Remarks
1	Top cover assy	7 739 834 871	■																	
2	Drainage pan assy	7 739 834 669	■																	
3	Evaporator compl	8 750 501 696	■																	
4	Evaporator inlet pipe	8 750 501 699	■																	
5	Expansion valve compl.	8 750 501 689	■																	
6	Expansion valve	8 750 501 692	■																	
7	Evaporator outlet pipe	8 750 501 702	■																	
8	Pipe temperature sensor	7 739 831 326	■																	
9	Middle beam assy	7 739 834 798	■																	
10	The left side plate assembly	7 739 834 859	■																	
11	Supporter	7 739 834 810	■																	
12	Supporting board assy	7 739 834 853	■																	
13	Brushless DC motor	7 739 834 659	■																	
14	Cover of motor, left	7 739 831 538	■																	
15	Cover of motor, right	7 739 831 541	■																	
16	Shell of centrifugal fan, up	7 739 831 653	■																	
17	Shell of centrifugal fan, down	7 739 831 660	■																	
18	Side cover right	8 750 501 708	■																	
19	Rear cover	8 750 501 706	■																	
20	Filter network	7 739 834 758	■																	
21	Flange components	7 739 834 761	■																	
22	CCB (400mm, SELV adapter)	8 750 501 441	■																	
23	Cover control box	8 750 501 688	■																	
24	Display	8 750 501 684	■																	
25	Control box compl	8 750 501 694	■																	
26	Electronic control box components	7 739 832 229	■																	
27	Main control board	8 750 501 704	■																	
28	Connector	8 750 501 712	■																	
29	Wiring terminal	7 739 831 566	■																	
30	Frame PCB	8 750 501 705	■																	
31	Right side of the board assembly	7 739 834 842	■																	
32	Drainage pump	8 733 501 344	■																	
33	Drainage pipe	7 739 831 315	■																	
34	Drainage pipe	7 739 831 628	■																	
35	Cover of water testing hole	7 739 831 440	■																	
36	Drainage pump	8 733 501 342	■																	
37	Bracket of drainage pump	8 733 501 237	■																	
38	Pipe clamp assembly	7 739 831 676	■																	
39	Evaporator right support plate	7 739 834 641	■																	
40	Centrifugal fan	7 739 831 648	■																	
41	Pipe temperature sensor	7 739 834 388	■																	
42	Room temperature sensor	8 733 501 653	■																	

AF-DHS 45-1 P 7 733 700 962

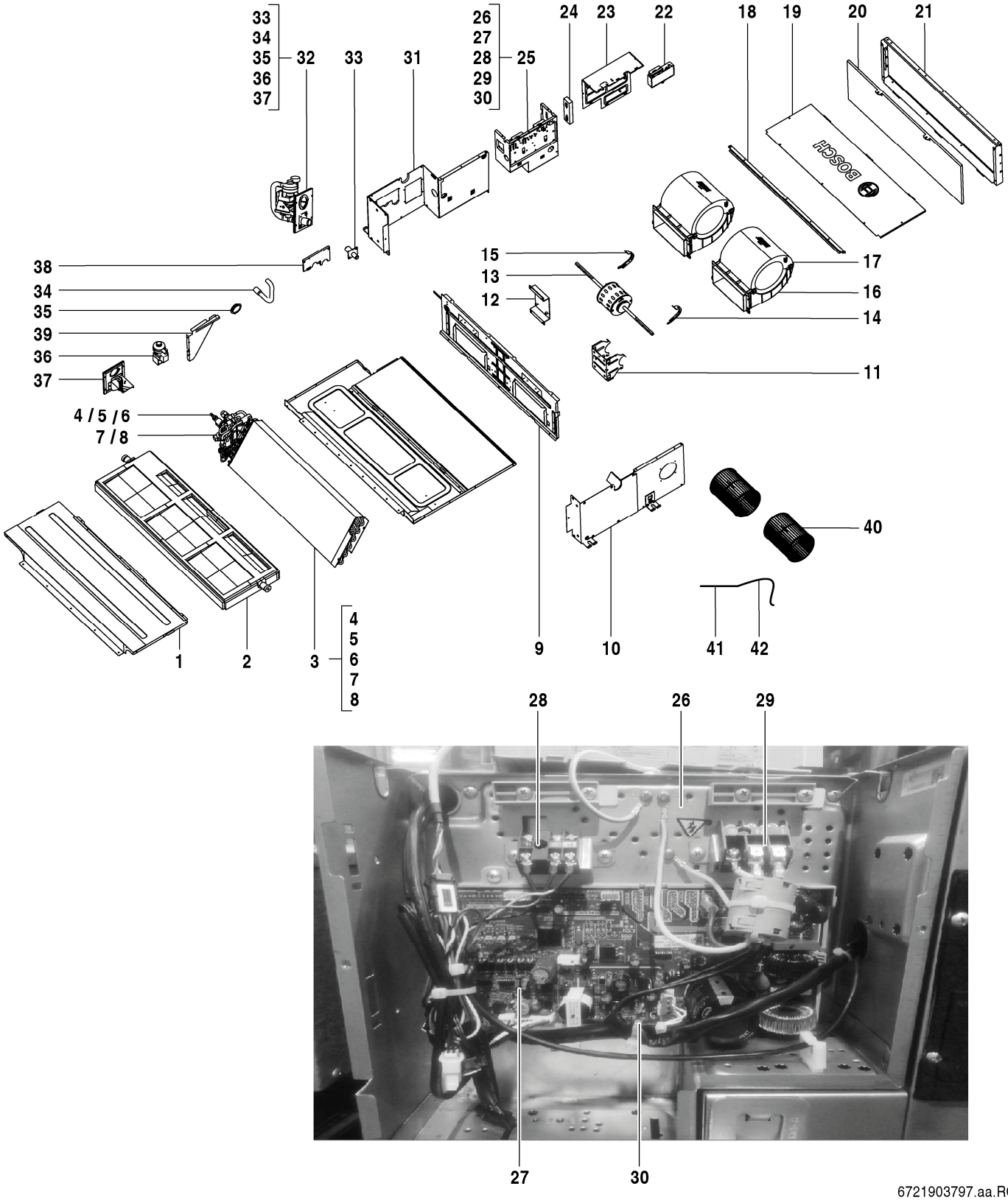

6721903797.aa.RO

Pos	Description	Ordering no.	AF-DHS 56-1 P																	Remarks
1	Top cover assy	7 739 834 871	■																	
2	Drainage pan assy	7 739 834 669	■																	
3	Evaporator parts	7 739 834 730	■																	
4	Evaporator inlet pipe	8 750 501 697	■																	
5	Electronic expansion valve assembly	8 733 501 352	■																	
6	Expansion valve	8 750 501 692	■																	
7	Evaporator outlet pipe	8 750 501 700	■																	
8	Pipe temperature sensor	7 739 831 326	■																	
9	Middle beam assy	7 739 834 798	■																	
10	The left side plate assembly	7 739 834 859	■																	
11	Supporter	7 739 834 810	■																	
12	Supporting board assy	7 739 834 853	■																	
13	Brushless DC motor	7 739 834 659	■																	
14	Cover of motor, left	7 739 831 538	■																	
15	Cover of motor, right	7 739 831 541	■																	
16	Shell of centrifugal fan, up	7 739 831 653	■																	
17	Shell of centrifugal fan, down	7 739 831 660	■																	
18	Side cover right	8 750 501 708	■																	
19	Rear cover	8 750 501 706	■																	
20	Filter network	7 739 834 758	■																	
21	Flange components	7 739 834 761	■																	
22	CCB (400mm, SELV adapter)	8 750 501 441	■																	
23	Cover control box	8 750 501 688	■																	
24	Display	8 750 501 684	■																	
25	Control box compl	8 750 501 694	■																	
26	Electronic control box components	7 739 832 229	■																	
27	Main control board	8 750 501 704	■																	
28	Connector	8 750 501 712	■																	
29	Wiring terminal	7 739 831 566	■																	
30	Frame PCB	8 750 501 705	■																	
31	Right side of the board assembly	7 739 834 842	■																	
32	Drainage pump	8 733 501 344	■																	
33	Drainage pipe	7 739 831 315	■																	
34	Drainage pipe	7 739 831 628	■																	
35	Cover of water testing hole	7 739 831 440	■																	
36	Drainage pump	8 733 501 342	■																	
37	Bracket of drainage pump	8 733 501 237	■																	
38	Pipe clamp assembly	7 739 831 676	■																	
39	Evaporator right support plate	7 739 834 641	■																	
40	Centrifugal fan	7 739 831 648	■																	
41	Pipe temperature sensor	7 739 834 388	■																	
42	Room temperature sensor	8 733 501 653	■																	

AF-DHS 56-1 P 7 733 700 963

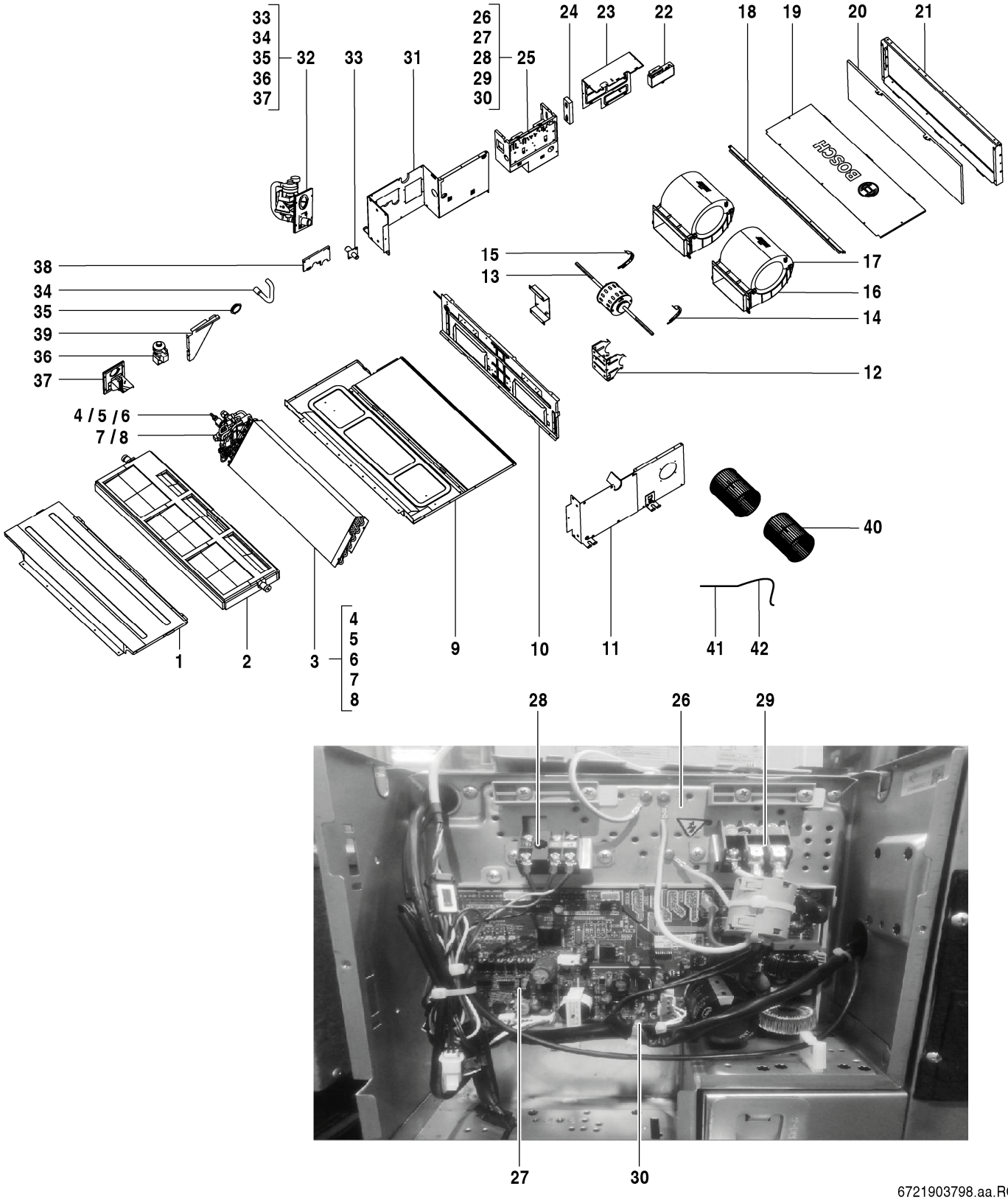
33
34
35
36
37
32
33
31
26
27
28
29
30
25
24
23
22
18
19
20
21
38
34
35
39
36
37
15
13
17
16
14
12
4 / 5 / 6
7 / 8
40
1
2
3
4
5
6
7
8
9
10
11
41
42
28
26
29
27
30
6721903798.aa.RO

Pos	Description	Ordering no.	AF-DHS 71-1 P																	Remarks
1	Cover	7 739 831 665	■																	
2	Drainage water pan	7 739 834 666	■																	
3	Evaporator parts	7 739 831 647	■																	
4	Evaporator inlet pipe assembly	8 733 501 480	■																	
5	Electronic expansion valve assembly	8 733 501 352	■																	
6	Expansion valve	8 750 501 692	■																	
7	Evaporator outlet pipe assembly	8 733 501 501	■																	
8	Pipe temperature sensor	7 739 831 326	■																	
9	Chassis assembly	7 739 832 228	■																	
10	Front beam assy	7 739 834 764	■																	
11	Side plate assembly, left	7 739 831 650	■																	
12	Supporter	7 739 834 810	■																	
13	Brushless DC motor	7 739 834 659	■																	
14	Cover of motor, left	7 739 831 538	■																	
15	Cover of motor, right	7 739 831 541	■																	
16	Shell of centrifugal fan, up	7 739 831 653	■																	
17	Shell of centrifugal fan, down	7 739 831 660	■																	
18	Side cover right	8 750 501 709	■																	
19	Rear cover	8 750 501 707	■																	
20	Air filter	7 739 831 661	■																	
21	Flange assembly	7 739 831 662	■																	
22	CCB (400mm, SELV adapter)	8 750 501 441	■																	
23	Cover control box	8 750 501 688	■																	
24	Display	8 750 501 684	■																	
25	Control box compl	8 750 501 694	■																	
26	Electronic control box components	7 739 832 229	■																	
27	Main control board	8 750 501 704	■																	
28	Connector	8 750 501 712	■																	
29	Wiring terminal	7 739 831 566	■																	
30	Frame PCB	8 750 501 705	■																	
31	Right side of the board assembly	7 739 831 677	■																	
32	Drainage pump	8 733 501 344	■																	
33	Drainage pipe	7 739 831 315	■																	
34	Drainage pipe	7 739 831 628	■																	
35	Cover of water testing hole	7 739 831 440	■																	
36	Drainage pump	8 733 501 342	■																	
37	Bracket of drainage pump	8 733 501 237	■																	
38	Pipe clamp assembly	7 739 831 676	■																	
39	Support evaporator	8 750 501 710	■																	
40	Centrifugal fan	7 739 831 648	■																	
41	Pipe temperature sensor	7 739 834 388	■																	
42	Room temperature sensor	8 733 501 653	■																	

AF-DHS 71-1 P 7 733 700 964

Spare parts list

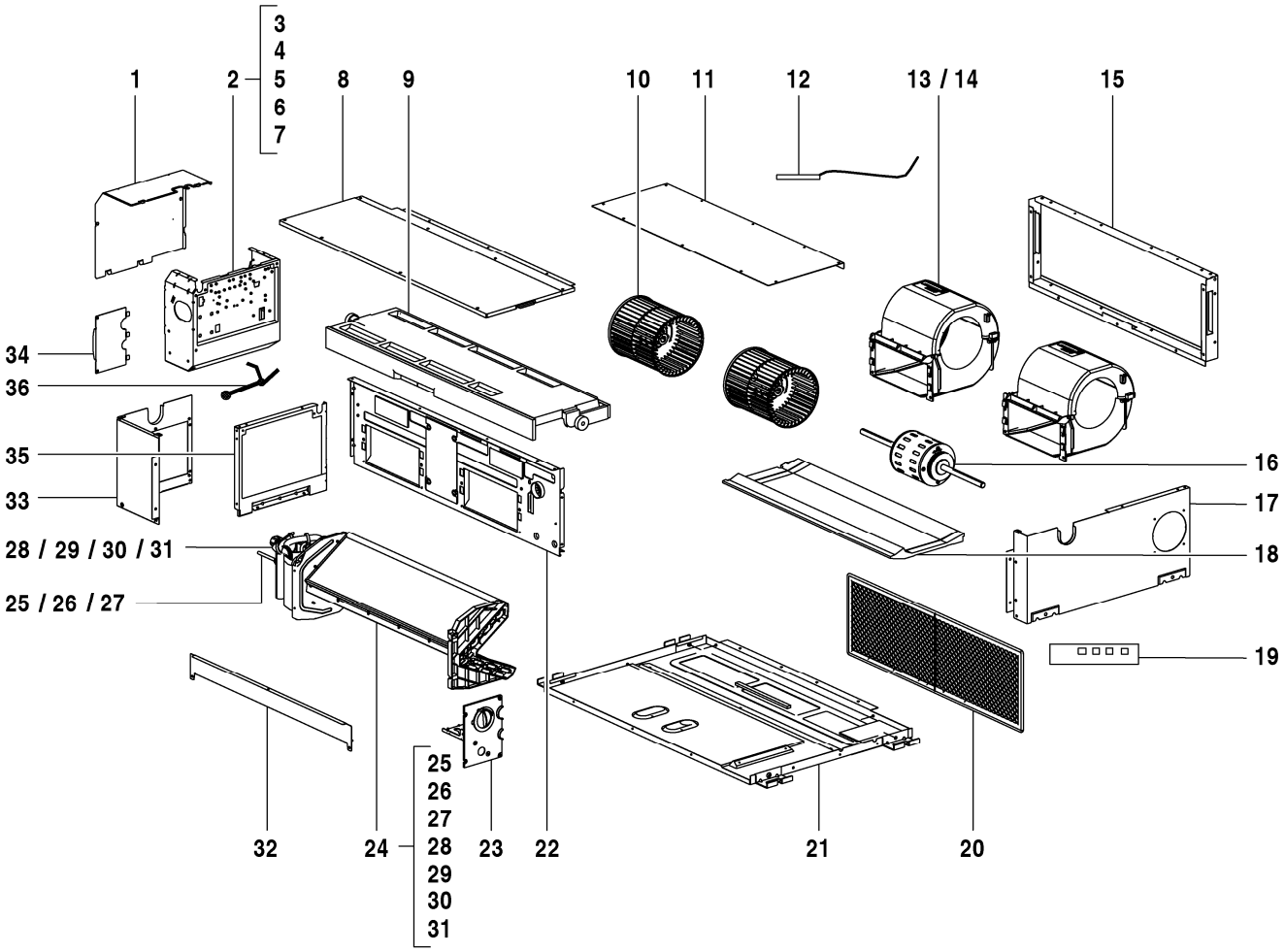

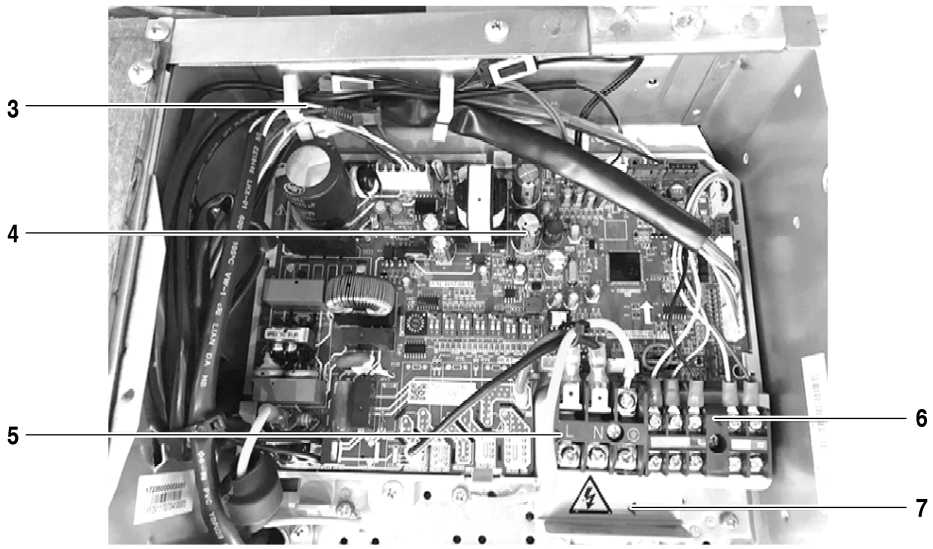

8738894864.aa.RO

AF-DL 22-1 P	7 733 700 937
AF-DL 28-1 P	7 733 700 938
AF-DL 36-1 P	7 733 700 939

Pos	Description	Ordering no.	DL 22-1 P	DL 28-1 P	DL 36-1 P														Remarks
1	Cover of E-part box	8 733 501 321	■	■	■														
2	E-part box with electronic components	8 733 501 380	■	■	■														
3	E-part box housing	7 739 836 397	■	■	■														
4	AFDL-1 main board	8 750 501 474	■	■	■														
5	Wiring terminal	7 739 831 566	■	■	■														
6	Wiring terminal	8 733 501 716	■	■	■														
7	Mounting plate of PCB	8 733 501 585	■	■	■														
8	Cover, top	7 739 831 572	■	■	■														
9	Drainage water pan	7 739 831 573	■	■	■														
10	Centrifugal fan	8 733 501 252	■	■	■														
11	Cover, rear	7 739 831 575	■	■	■														
12	Pipe temperature sensor	7 739 831 461	■	■	■														
13	Shell of centrifugal fan, up	7 739 836 431	■	■	■														
14	Shell of centrifugal fan, down	7 739 836 432	■	■	■														
15	Flange assembly	7 739 831 578	■	■	■														
16	Side plate assembly, left	7 739 831 579	■	■	■														
17	Brushless DC motor	8 733 501 245	■	■	■														
18	Foam of chassis assembly	7 739 836 434	■	■	■														
19	Display board	7 739 834 665	■	■	■														
20	Air filter	8 733 501 210	■	■	■														
21	Chassis assembly	8 733 501 258	■	■	■														
22	Beam assembly	8 733 501 218	■	■	■														
23	Drainage pump	8 733 501 343	■	■	■														
24	Evaporator assembly	8 733 501 435	■	■	■														
25	Evaporator inlet pipe assembly	8 733 501 482	■	■	■														
26	Electronic expansion valve assembly	8 733 501 355	■	■	■														
27	EXV valve body	7 739 831 491	■	■	■														
28	Evaporator outlet pipe assembly	8 733 501 498	■	■	■														
29	Pipe temperature sensor	7 739 831 451	■	■	■														
30	Pipe temperature sensor	8 733 501 622	■	■	■														
31	EXV valve coil	8 733 501 505	■	■	■														
32	Beam, front	7 739 831 590	■	■	■														
33	Side plate assembly, right	7 739 831 591	■	■	■														
34	Pipe clamp assembly	7 739 836 416	■	■	■														
35	Side plate assembly, right	7 739 831 593	■	■	■														
36	Communication wires	8 733 501 272	■	■	■														
	CCB (400mm, SELV adapter)	8 750 501 441	■	■	■														
	Connection cable AF-IDU	8 750 501 446	■	■	■														

AF-DL 22-1 P	7 733 700 937
AF-DL 28-1 P	7 733 700 938
AF-DL 36-1 P	7 733 700 939

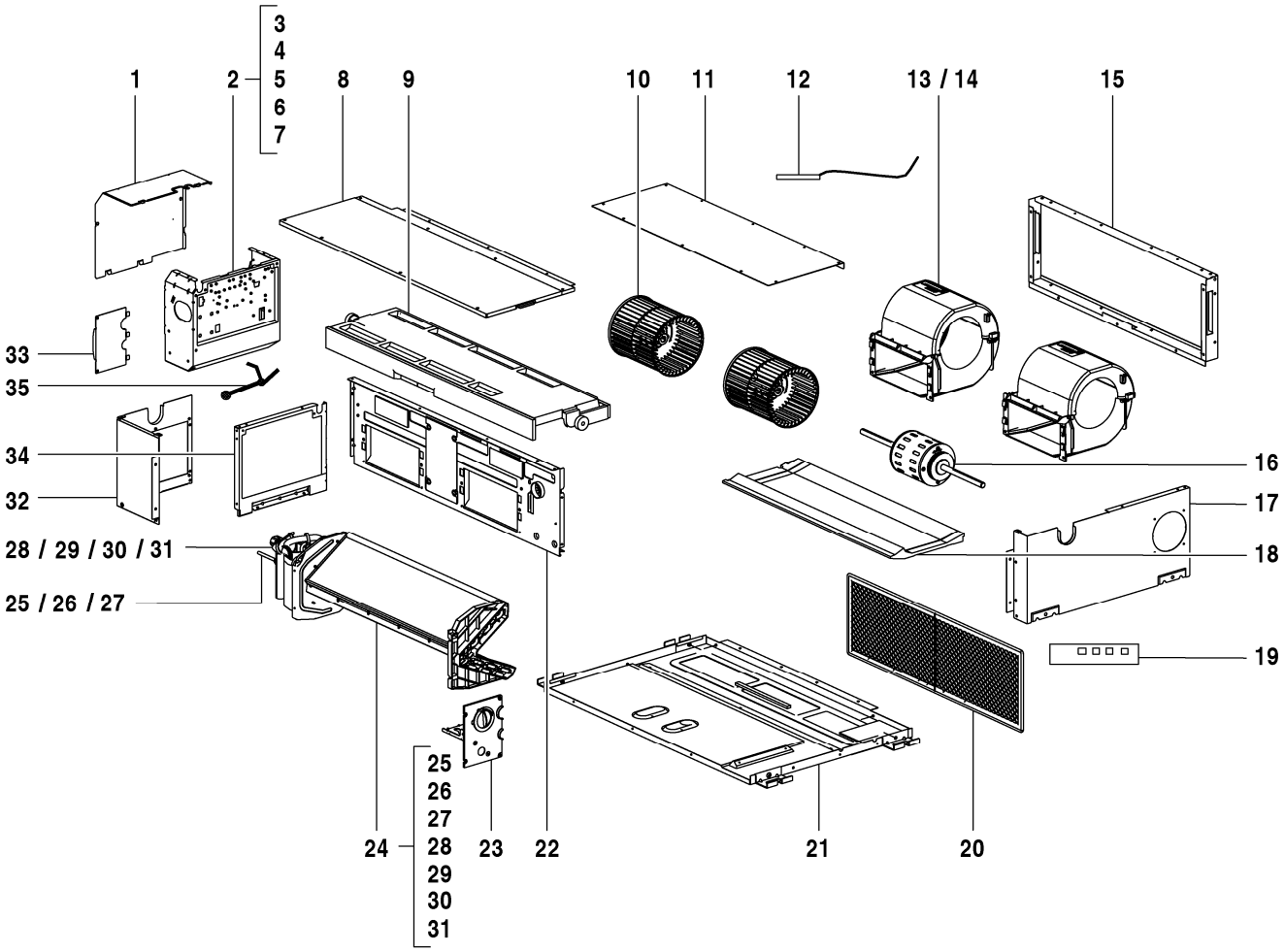

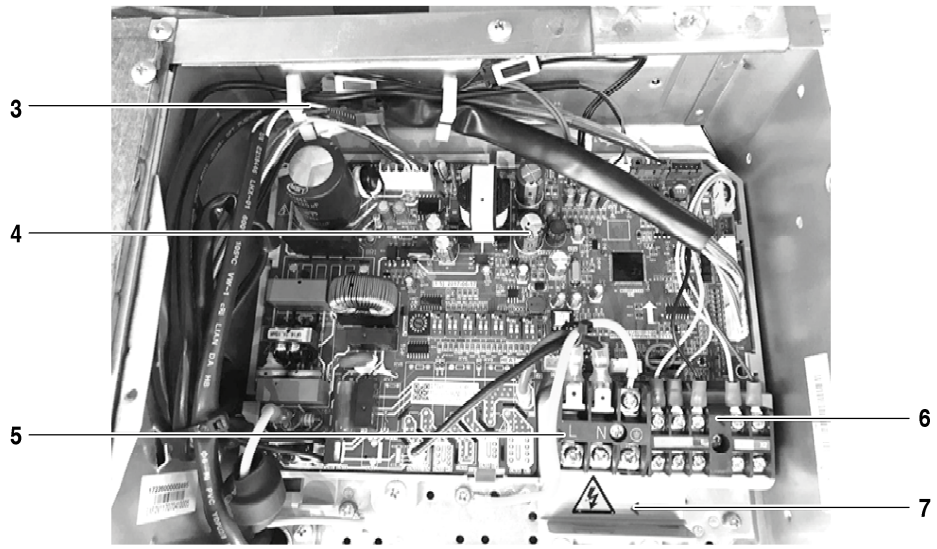

8738894865.aa.RO

AF-DL 45-1 P	7 733 700 940
AF-DL 56-1 P	7 733 700 941

Pos	Description	Ordering no.	DL 45-1 P	DL 56-1 P															Remarks
1	Cover of E-part box	8 733 501 321	■	■															
2	E-part box with electronic components	8 733 501 380	■	■															
3	E-part box housing	7 739 836 397	■	■															
4	AFDL-1 main board	8 750 501 474	■	■															
5	Wiring terminal	7 739 831 566	■	■															
6	Wiring terminal	8 733 501 716	■	■															
7	Mounting plate of PCB	8 733 501 585	■	■															
8	Cover, top	7 739 831 626	■	■															
9	Drainage water pan	7 739 831 625	■	■															
10	Centrifugal fan	8 733 501 254	■	■															
11	Cover, rear	7 739 831 619	■	■															
12	Pipe temperature sensor	7 739 831 461	■	■															
13	Shell of centrifugal fan, up	7 739 831 614	■	■															
14	Shell of centrifugal fan, down	7 739 831 613	■	■															
15	Flange assembly	7 739 831 618	■	■															
16	Side plate assembly, left	7 739 831 579	■	■															
17	Brushless DC motor	8 733 501 245	■	■															
18	Foam of chassis assembly	7 739 834 762	■	■															
19	Display board	7 739 834 665	■	■															
20	Air filter	8 733 501 208	■	■															
21	Chassis assembly	8 733 501 257	■	■															
22	Beam assembly	8 733 501 219	■	■															
23	Drainage pump	8 733 501 343	■	■															
24	Evaporator assembly	8 733 501 436	■																
24	Evaporator assembly	8 733 501 437		■															
25	Evaporator inlet pipe assembly	7 739 836 412		■															
25	Evaporator inlet pipe assembly	7 739 836 465	■																
26	Filter	8 733 501 514		■															
26	Filter	8 733 501 515	■																
27	EXV valve body	7 739 831 491	■	■															
28	Evaporator outlet pipe assembly	7 739 836 413		■															
28	Evaporator outlet pipe assembly	7 739 836 466	■																
29	Pipe temperature sensor	7 739 831 451	■	■															
30	Pipe temperature sensor	8 733 501 622	■	■															
31	EXV valve coil	8 733 501 505	■	■															
32	Side plate assembly, right	7 739 831 591	■	■															
33	Pipe clamp assembly	7 739 836 416	■	■															
34	Side plate assembly, right	7 739 831 593	■	■															
35	Communication wires	8 733 501 272	■	■															
	CCB (400mm, SELV adapter)	8 750 501 441	■	■															
	Connection cable AF-IDU	8 750 501 446	■	■															

AF-DL 45-1 P 7 733 700 940

AF-DL 56-1 P 7 733 700 941

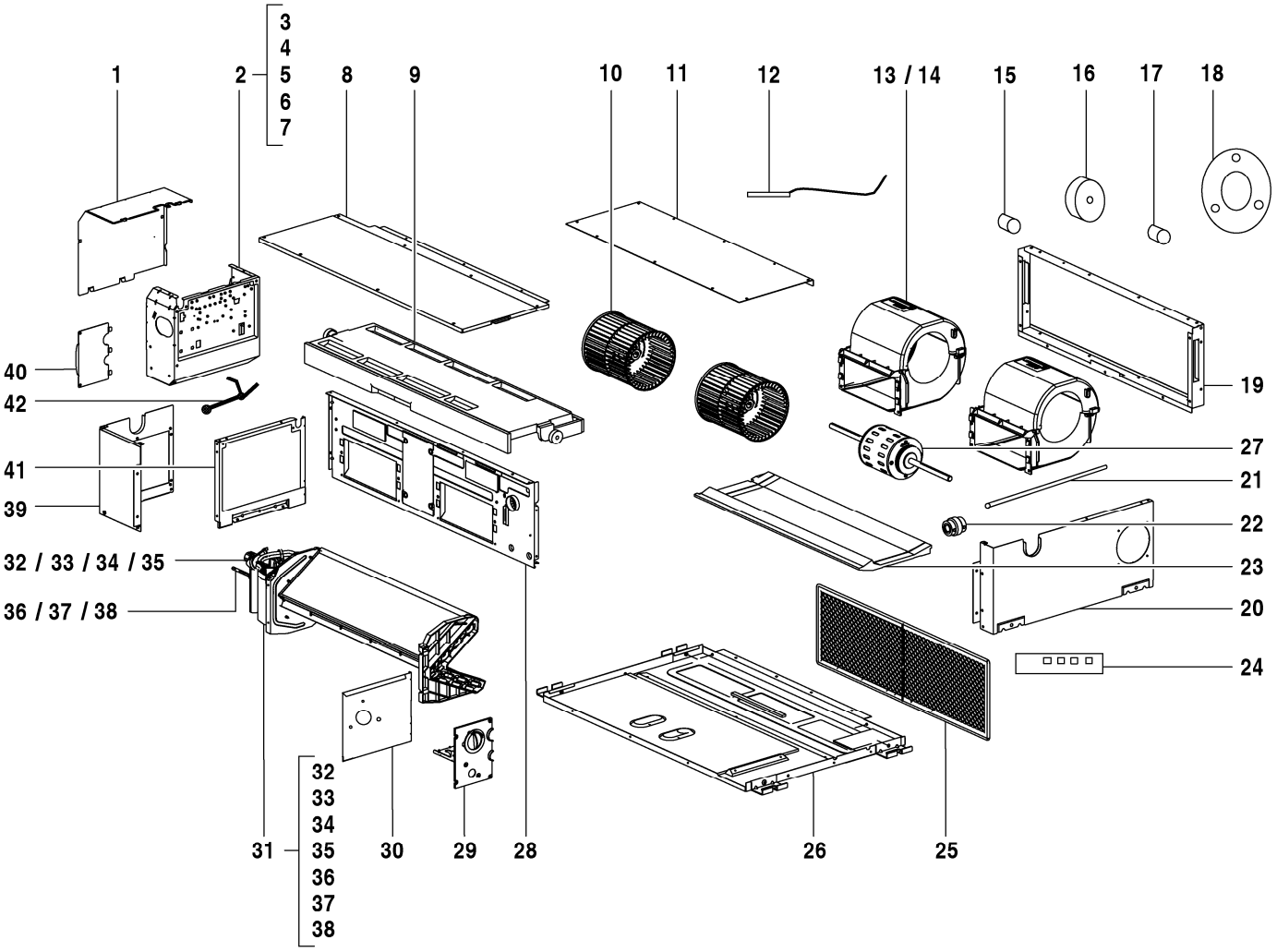

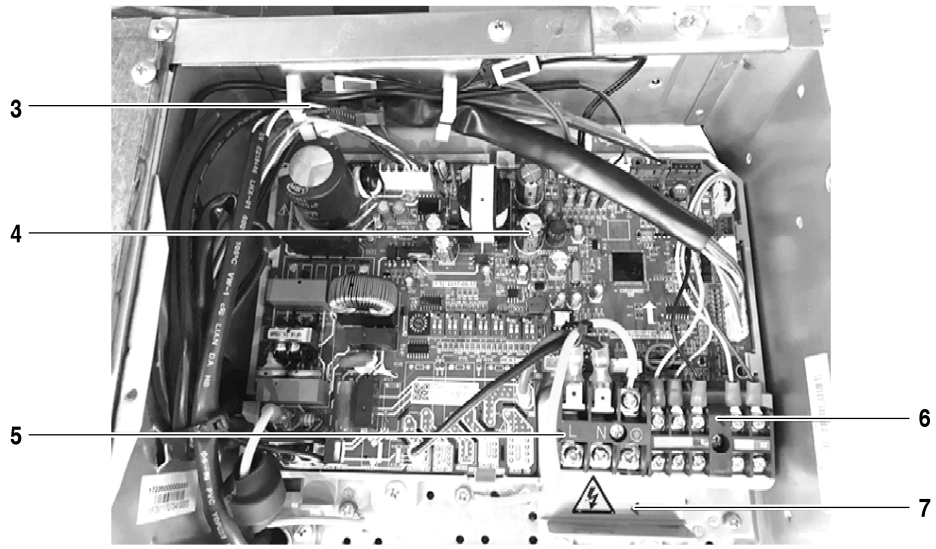

8738894866.aa.RO

Pos	Description	Ordering no.	DL 71-1 P																	Remarks
1	Cover of E-part box	8 733 501 321	■																	
2	E-part box with electronic components	8 733 501 380	■																	
3	E-part box housing	7 739 836 397	■																	
4	AFDL-1 main board	8 750 501 474	■																	
5	Wiring terminal	7 739 831 566	■																	
6	Wiring terminal	8 733 501 716	■																	
7	Mounting plate of PCB	8 733 501 585	■																	
8	Cover, top	7 739 831 644	■																	
9	Drainage water pan	7 739 831 643	■																	
10	Centrifugal fan	8 733 501 254	■																	
11	Cover, rear	7 739 831 635	■																	
12	Pipe temperature sensor	7 739 831 461	■																	
13	Shell of centrifugal fan, up	7 739 831 614	■																	
14	Shell of centrifugal fan, down	7 739 831 613	■																	
15	Bearing	7 739 831 455	■																	
16	Rubber pad	8 733 501 660	■																	
17	Bearing base	8 733 501 231	■																	
18	Panel	8 733 501 604	■																	
19	Flange assembly	7 739 836 403	■																	
20	Side plate assembly, left	7 739 831 579	■																	
21	Shaft	8 733 501 664	■																	
22	Shaft	8 733 501 665	■																	
23	Foam of chassis assembly	7 739 836 419	■																	
24	Display board	7 739 834 665	■																	
25	Air filter	8 733 501 209	■																	
26	Chassis assembly	8 733 501 256	■																	
27	Brushless DC motor	8 733 501 242	■																	
28	Beam, middle	8 733 501 228	■																	
29	Drainage pump	8 733 501 343	■																	
30	Supporter	8 733 501 696	■																	
31	Evaporator assembly	8 733 501 438	■																	
32	Pipe temperature sensor	7 739 831 451	■																	
33	Pipe temperature sensor	8 733 501 622	■																	
34	EXV valve coil	8 733 501 505	■																	
35	Evaporator outlet pipe assembly	7 739 836 413	■																	
36	Evaporator inlet pipe assembly	7 739 836 412	■																	
37	Filter	8 733 501 514	■																	
38	EXV valve body	7 739 831 491	■																	
39	Side plate assembly, right	7 739 831 591	■																	
40	Pipe clamp assembly	7 739 836 416	■																	
41	Side plate assembly, right	7 739 831 593	■																	
42	Communication wires	8 733 501 272	■																	
	CCB (400mm, SELV adapter)	8 750 501 441	■																	
	Connection cable AF-IDU	8 750 501 446	■																	

Spare parts list

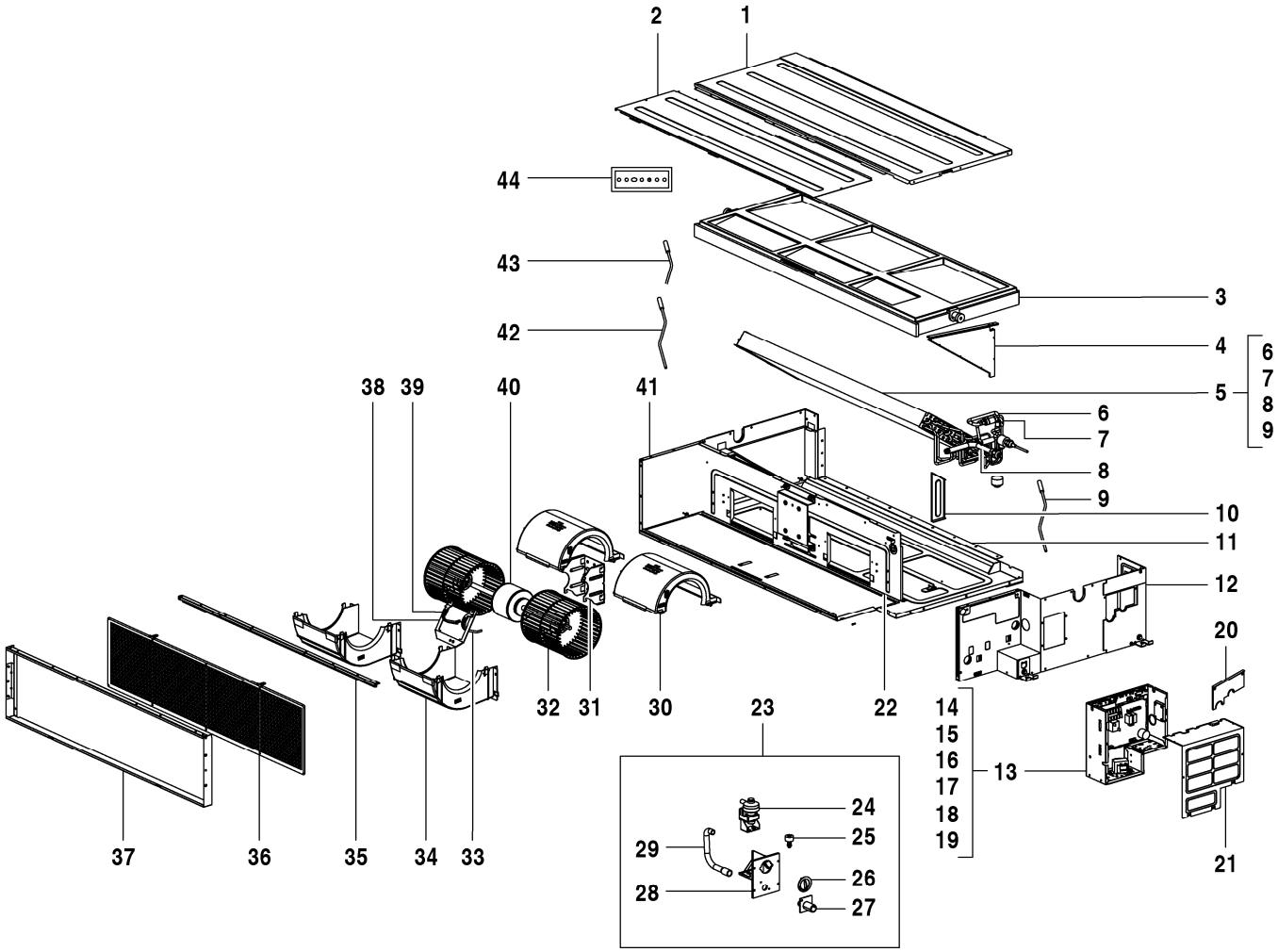

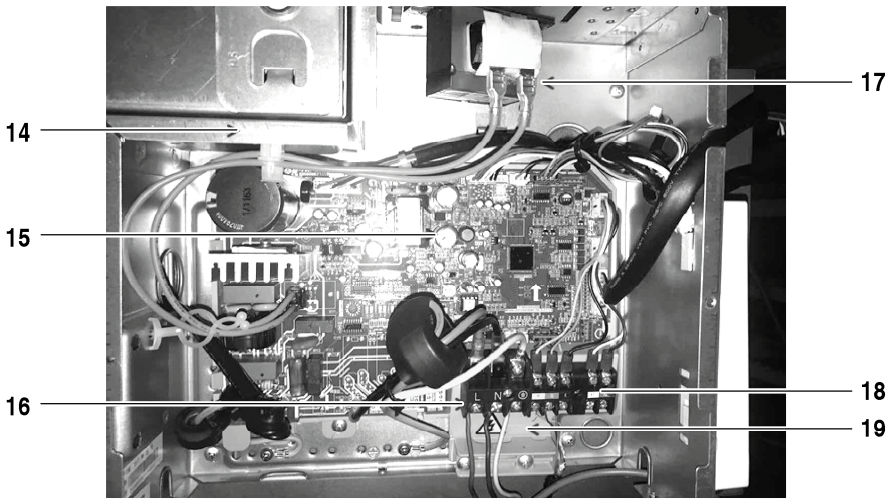

8738894891.aa.RO

AF-DM 80-1 P	7 733 700 943
AF-DM 90-1 P	7 733 700 944
AF-DM 112-1 P	7 733 700 945

Pos	Description	Ordering no.	DM 80-1 P	DM 90-1 P	DM 112-1 P														Remarks
1	Cover	7 739 831 665	■	■	■														
2	Cover, rear	7 739 831 664	■	■	■														
3	Drainage water pan	7 739 834 666	■	■	■														
4	Mounting plate of evaporator	7 739 831 678	■	■	■														
5	Evaporator assembly	8 733 501 432		■	■														
5	Evaporator assembly	8 733 501 434	■																
6	Evaporator inlet pipe assembly	8 733 501 478		■	■														
6	Evaporator inlet pipe assembly	8 733 501 480	■																
7	Electronic expansion valve assembly	8 733 501 352	■																
7	Electronic expansion valve assembly	8 733 501 354		■	■														
8	Evaporator outlet pipe assembly	8 733 501 501	■																
8	Evaporator outlet pipe assembly	8 733 501 502		■	■														
9	Pipe temperature sensor	7 739 834 388	■	■	■														
10	Side plate assembly, right	7 739 834 843	■	■	■														
11	Chassis assembly	7 739 832 228	■	■	■														
12	Side plate assembly	8 733 501 668	■	■	■														
13	E-part box with electronic components	8 733 501 381	■	■	■														
14	E-part box housing	8 733 501 375	■	■	■														
15	Indoor unit main PCB	8 733 501 551	■	■	■														
16	Wiring terminal	7 739 831 566	■	■	■														
17	Reactor	7 739 834 837	■	■	■														
18	Wiring terminal	8 733 501 716	■	■	■														
19	Mounting plate of PCB	8 733 501 585	■	■	■														
20	Pipe clamp assembly	7 739 831 676	■	■	■														
21	Cover of E-part box	8 733 501 316	■	■	■														
22	Beam assembly	8 733 501 217	■	■	■														
23	Drainage pump	8 733 501 344	■	■	■														
24	Drainage pump	8 733 501 342	■	■	■														
25	Water level switch	8 733 501 715	■	■	■														
26	Cover of water testing hole	7 739 831 440	■	■	■														
27	Drainage pipe	7 739 831 315	■	■	■														
28	Bracket of drainage pump	8 733 501 237	■	■	■														
29	Drainage pipe	7 739 831 628	■	■	■														
30	Shell of centrifugal fan, up	7 739 831 653	■	■	■														
31	Supporter	7 739 834 810	■	■	■														
32	Centrifugal fan	7 739 831 648	■	■	■														
33	Cover of motor, right	7 739 831 541	■	■	■														
34	Shell of centrifugal fan, down	7 739 831 660	■	■	■														
35	Beam, rear	7 739 831 663	■	■	■														
36	Air filter	7 739 831 661	■	■	■														
37	Flange assembly	7 739 831 662	■	■	■														
38	Board assembly	7 739 834 630	■	■	■														
39	Cover of motor, left	7 739 831 538	■	■	■														
40	Brushless DC motor	7 739 834 659	■	■	■														
41	Side plate assembly, left	7 739 831 650	■	■	■														
42	Pipe temperature sensor	7 739 831 461	■	■	■														
43	Pipe temperature sensor	7 739 834 388	■	■	■														
44	Display board	7 739 834 665	■	■	■														
	CCB (400mm, SELV adapter)	8 750 501 441	■	■	■														
	Connection cable AF-IDU	8 750 501 446	■	■	■														

AF-DM 80-1 P	7 733 700 943
AF-DM 90-1 P	7 733 700 944
AF-DM 112-1 P	7 733 700 945

Spare parts list

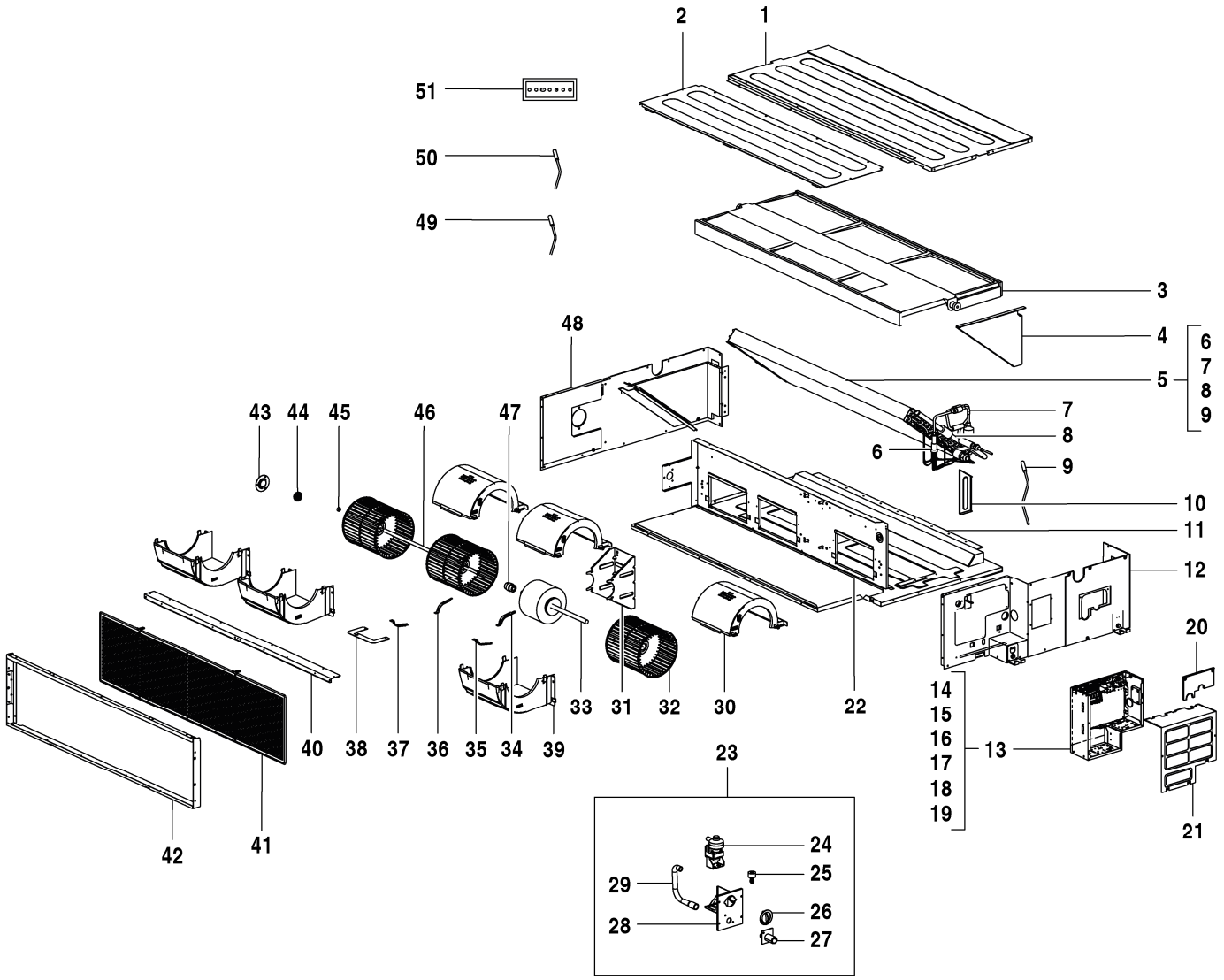

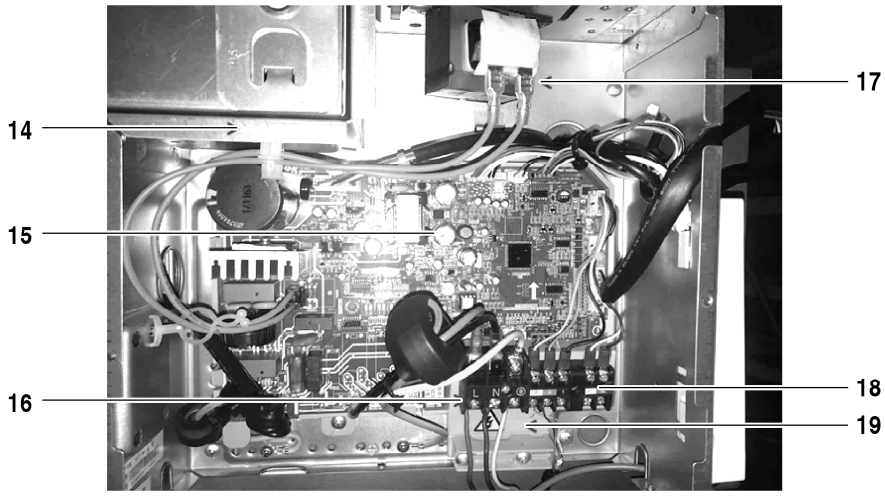

8738894892.aa.RO

AF-DM 140-1 P 7 733 700 946

Pos	Description	Ordering no.	DM 140-1 P																Remarks
1	Cover	7 739 834 648	■																
2	Cover, rear	7 739 831 694	■																
3	Drainage water pan	7 739 834 621	■																
4	Mounting plate of evaporator	7 739 831 690	■																
5	Evaporator assembly	8 733 501 433	■																
6	Evaporator inlet pipe assembly	8 733 501 479	■																
7	Electronic expansion valve assembly	8 733 501 353	■																
8	Evaporator outlet pipe assembly	8 733 501 500	■																
9	Pipe temperature sensor	7 739 834 388	■																
10	Side plate assembly, right	7 739 831 692	■																
11	Chassis assembly	7 739 831 689	■																
12	Side plate assembly	8 733 501 673	■																
13	E-part box with electronic components	8 733 501 381	■																
14	E-part box housing	8 733 501 375	■																
15	Indoor unit main PCB	8 733 501 551	■																
16	Wiring terminal	7 739 831 566	■																
17	Reactor	7 739 834 837	■																
18	Wiring terminal	8 733 501 716	■																
19	Mounting plate of PCB	8 733 501 585	■																
20	Pipe clamp assembly	7 739 831 676	■																
21	Cover of E-part box	8 733 501 316	■																
22	Beam, middle	8 733 501 227	■																
23	Drainage pump	8 733 501 344	■																
24	Drainage pump	8 733 501 342	■																
25	Water level switch	8 733 501 715	■																
26	Cover of water testing hole	7 739 831 440	■																
27	Drainage pipe	7 739 831 315	■																
28	Bracket of drainage pump	8 733 501 237	■																
29	Drainage pipe	7 739 831 628	■																
30	Shell of centrifugal fan, up	7 739 831 653	■																
31	Supporter	7 739 834 811	■																
32	Centrifugal fan	7 739 831 648	■																
33	Brushless DC motor	7 739 834 660	■																
34	Cover of motor, right	7 739 831 657	■																
35	Cover of motor, right	7 739 831 655	■																
36	Cover of motor, left	7 739 831 656	■																
37	Cover of motor, left	7 739 831 654	■																
38	Board assembly	7 739 834 631	■																
39	Shell of centrifugal fan, down	7 739 831 660	■																
40	Beam, rear	7 739 831 695	■																
41	Air filter	7 739 831 696	■																
42	Flange assembly	7 739 831 697	■																
43	Mounting base of bearing	7 739 834 625	■																
44	Bearing base	7 739 831 638	■																
45	Bearing	7 739 831 455	■																
46	Shaft	7 739 832 230	■																
47	Shaft	7 739 831 632	■																
48	Side plate assembly, left	7 739 831 687	■																
49	Pipe temperature sensor	7 739 831 461	■																
50	Pipe temperature sensor	7 739 834 388	■																
51	Display board	7 739 834 665	■																
	CCB (400mm, SELV adapter)	8 750 501 441	■																

AF-DM 140-1 P 7 733 700 946

Spare parts list

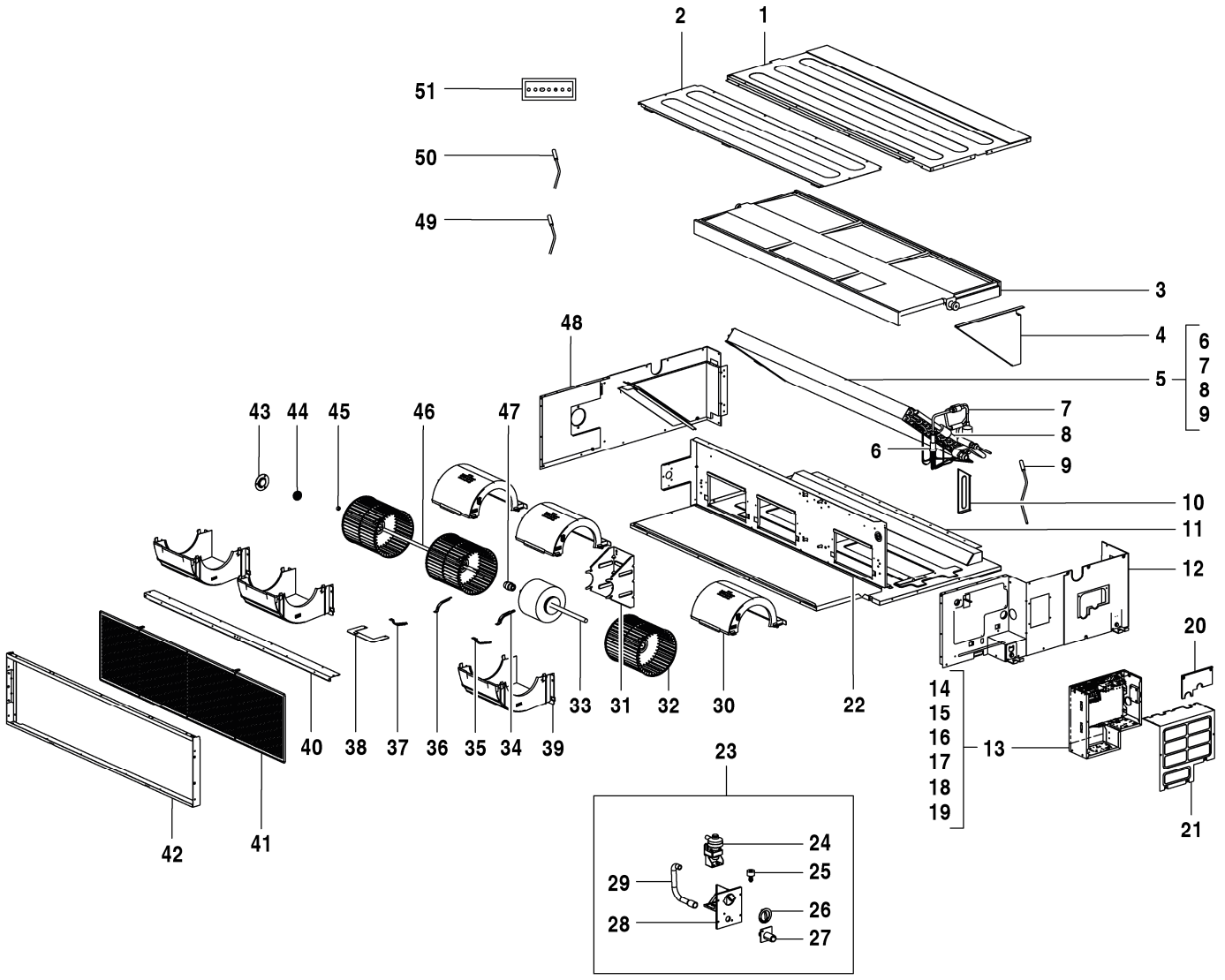

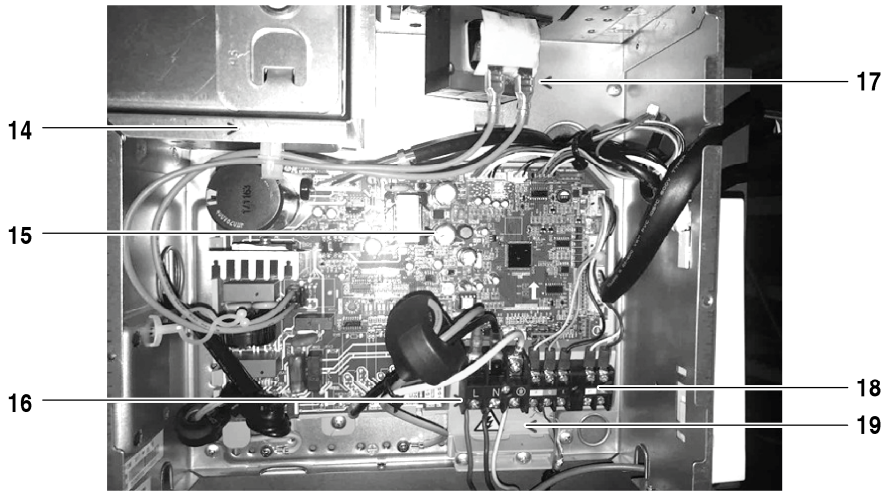

8738894892.aa.RO

AF-DM 140-1 P 7 733 700 946

Pos	Description	Ordering no.	DM 140-1 P																	Remarks
	Connection cable AF-IDU	8 750 501 446	■																	

AF-DM 140-1 P 7 733 700 946

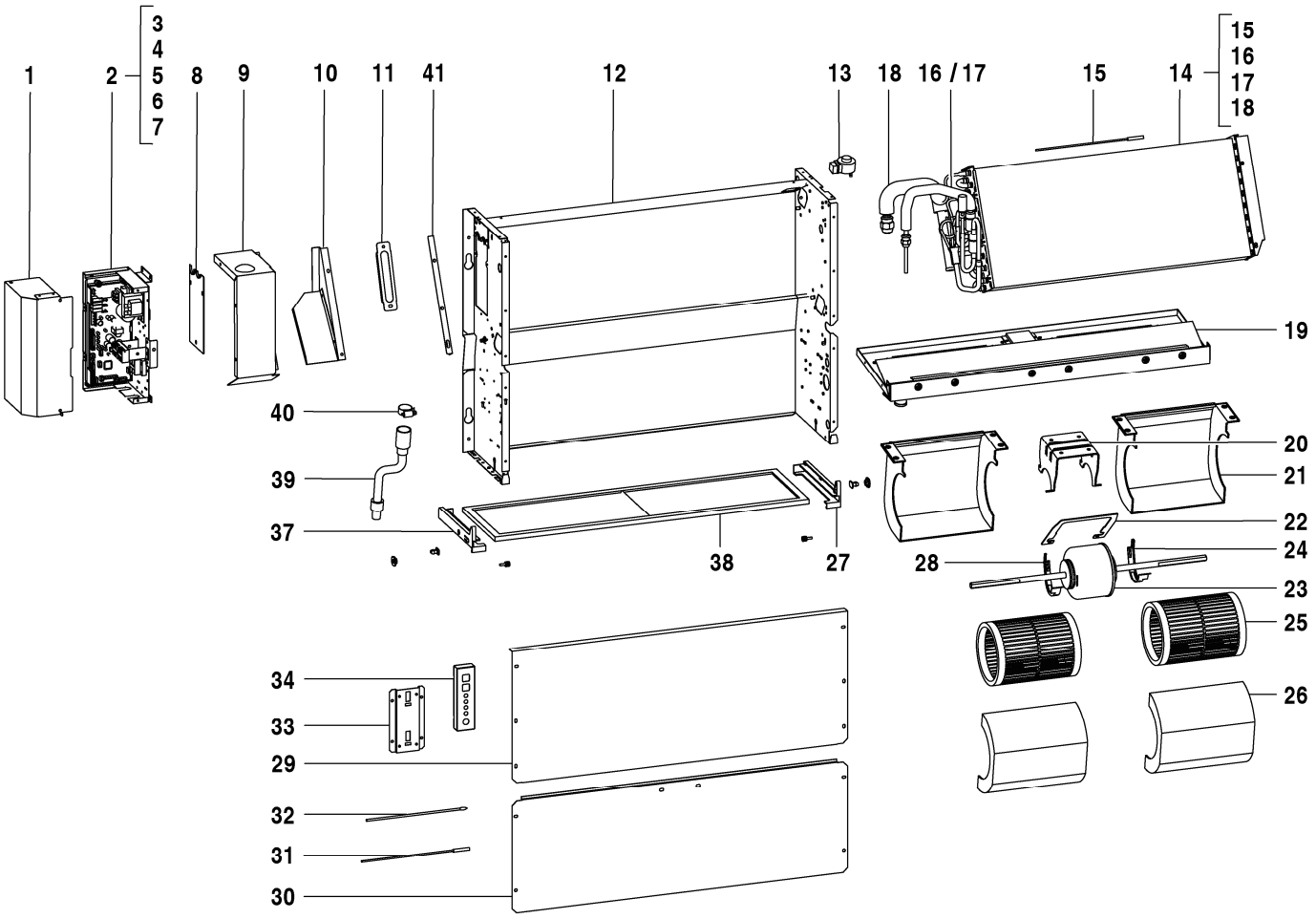

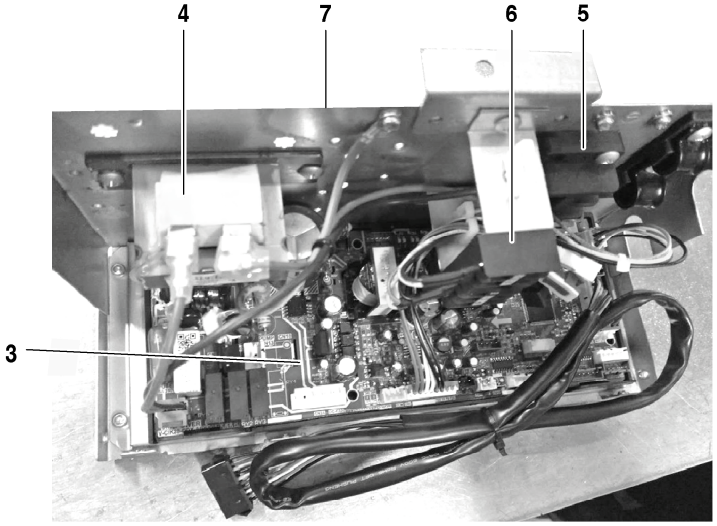

8738894852.aa.RO

AF-F 22-1	7 733 700 984
AF-F 28-1	7 733 700 985

Pos	Description	Ordering no.	F 22-1	F 28-1															Remarks
1	Cover of E-part box	8 733 501 322	■	■															
2	E-part box with electronic components	8 733 501 386	■	■															
3	Indoor unit main PCB	8 733 501 542	■	■															
4	Reactor	8 733 501 650	■	■															
5	Wiring terminal	7 739 834 883	■	■															
6	Wiring terminal	8 733 501 716	■	■															
7	E-part box housing	8 733 501 376	■	■															
8	Board assembly	7 739 834 841	■	■															
9	Mounting plate of evaporator	7 739 834 712	■	■															
10	Mounting plate of evaporator	7 739 834 852	■	■															
11	Supporter	8 733 501 697	■	■															
12	Base assembly	7 739 834 616	■	■															
13	EXV valve coil	7 739 831 358	■	■															
14	Evaporator assembly	7 739 834 728	■	■															
15	Pipe temperature sensor	7 739 834 834	■	■															
16	Evaporator inlet pipe assembly	7 739 834 729	■	■															
17	EXV valve body	7 739 831 491	■	■															
18	Evaporator outlet pipe assembly	7 739 834 817	■	■															
19	Beam, middle	7 739 834 797	■	■															
20	Motor base	7 739 834 803	■	■															
21	Shell of centrifugal fan, down	7 739 834 874	■	■															
22	Board assembly	7 739 834 812	■	■															
23	Brushless DC motor	7 739 834 661	■	■															
24	Cover of motor, right	7 739 831 541	■	■															
25	Centrifugal fan	7 739 834 610	■	■															
26	Shell of centrifugal fan, up	7 739 834 875	■	■															
27	Bracket of air filter	7 739 834 756	■	■															
28	Cover of motor, left	7 739 831 538	■	■															
29	Cover II, top	7 739 834 650	■	■															
30	Cover I, top	7 739 834 649	■	■															
31	Pipe temperature sensor	8 733 501 622	■	■															
32	Room temperature sensor	8 733 501 653	■	■															
33	Supporter	8 733 501 698	■	■															
34	Display board	7 739 834 665	■	■															
37	Bracket of air filter	7 739 834 757	■	■															
38	Air filter	7 739 834 750	■	■															
39	Drainage pipe	7 739 834 876	■	■															
40	Drainage pipe clip	8 733 501 341	■	■															
41	Board assembly	7 739 834 613	■	■															
	CCB (400mm, SELV adapter)	8 750 501 441	■	■															
	Connection cable AF-IDU	8 750 501 446	■	■															

AF-F 22-1 7 733 700 984

AF-F 28-1 7 733 700 985

Spare parts list

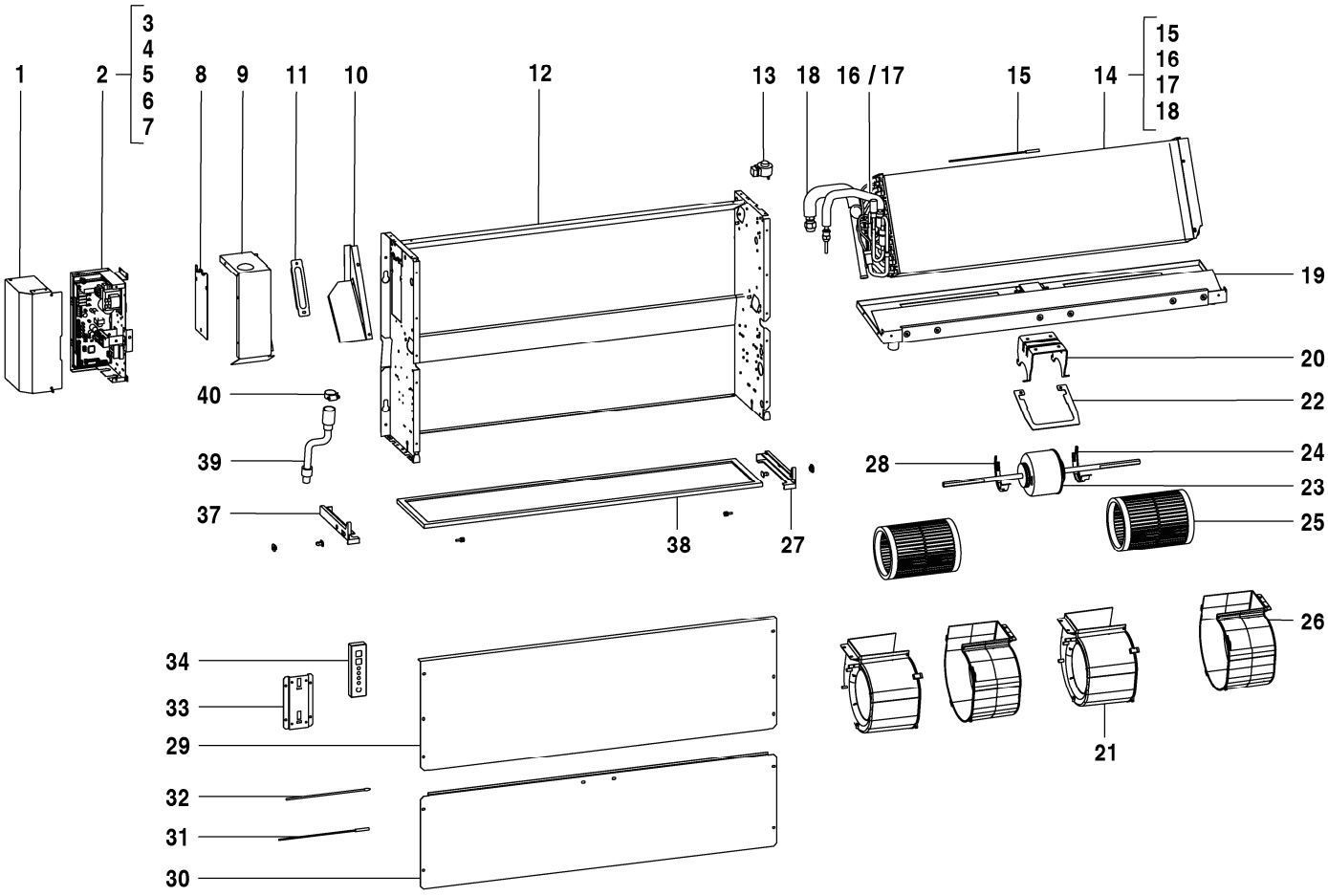

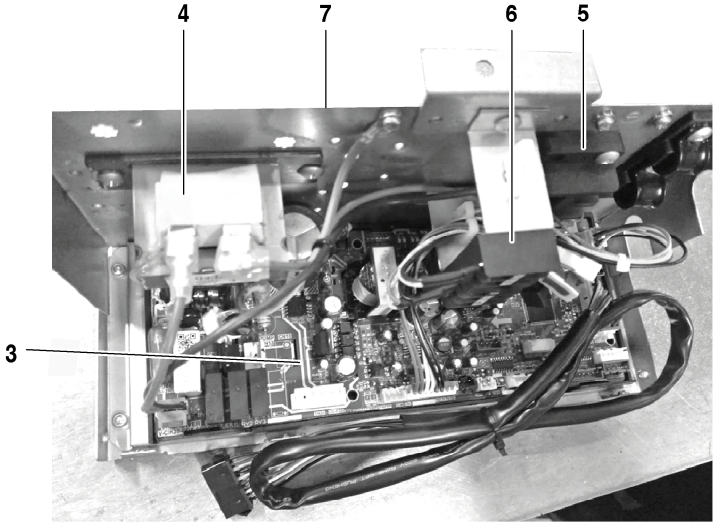

8738894853.aa.RO

AF-F 36-1	7 733 700 986
AF-F 45-1	7 733 700 987

Pos	Description	Ordering no.	F 36-1	F 45-1															Remarks
1	Cover of E-part box	8 733 501 322	■	■															
2	E-part box with electronic components	8 733 501 386	■	■															
3	Indoor unit main PCB	8 733 501 542	■	■															
4	Reactor	8 733 501 650	■	■															
5	Wiring terminal	7 739 834 883	■	■															
6	Wiring terminal	8 733 501 716	■	■															
7	E-part box housing	8 733 501 376	■	■															
8	Board assembly	7 739 834 841	■	■															
9	Mounting plate of evaporator	7 739 834 712	■	■															
10	Mounting plate of evaporator	7 739 834 852	■	■															
11	Supporter	8 733 501 697	■	■															
12	Base assembly	7 739 834 617	■	■															
13	EXV valve coil	7 739 831 358	■	■															
14	Evaporator assembly	7 739 834 727	■	■															
15	Pipe temperature sensor	7 739 834 834	■	■															
16	Evaporator inlet pipe assembly	7 739 834 714	■	■															
17	EXV valve body	7 739 831 491	■	■															
18	Evaporator outlet pipe assembly	7 739 834 818	■	■															
19	Beam, middle	7 739 834 795	■	■															
20	Motor base	7 739 834 803	■	■															
21	Shell of centrifugal fan, right	7 739 834 873	■	■															
22	Board assembly	7 739 834 812	■	■															
23	Brushless DC motor	7 739 834 661	■	■															
24	Cover of motor, right	7 739 831 541	■	■															
25	Centrifugal fan	7 739 834 609	■	■															
26	Shell of centrifugal fan, left	7 739 834 784	■	■															
27	Bracket of air filter	7 739 834 756	■	■															
28	Cover of motor, left	7 739 831 538	■	■															
29	Cover II, top	7 739 834 652	■	■															
30	Cover I, top	7 739 834 651	■	■															
31	Pipe temperature sensor	8 733 501 622	■	■															
32	Room temperature sensor	8 733 501 653	■	■															
33	Supporter	8 733 501 698	■	■															
34	Display board	7 739 834 665	■	■															
37	Bracket of air filter	7 739 834 757	■	■															
38	Air filter	7 739 834 751	■	■															
39	Drainage pipe	7 739 834 876	■	■															
40	Drainage pipe clip	8 733 501 341	■	■															
	CCB (400mm, SELV adapter)	8 750 501 441	■	■															
	Connection cable AF-IDU	8 750 501 446	■	■															

AF-F 36-1 7 733 700 986

AF-F 45-1 7 733 700 987

Spare parts list

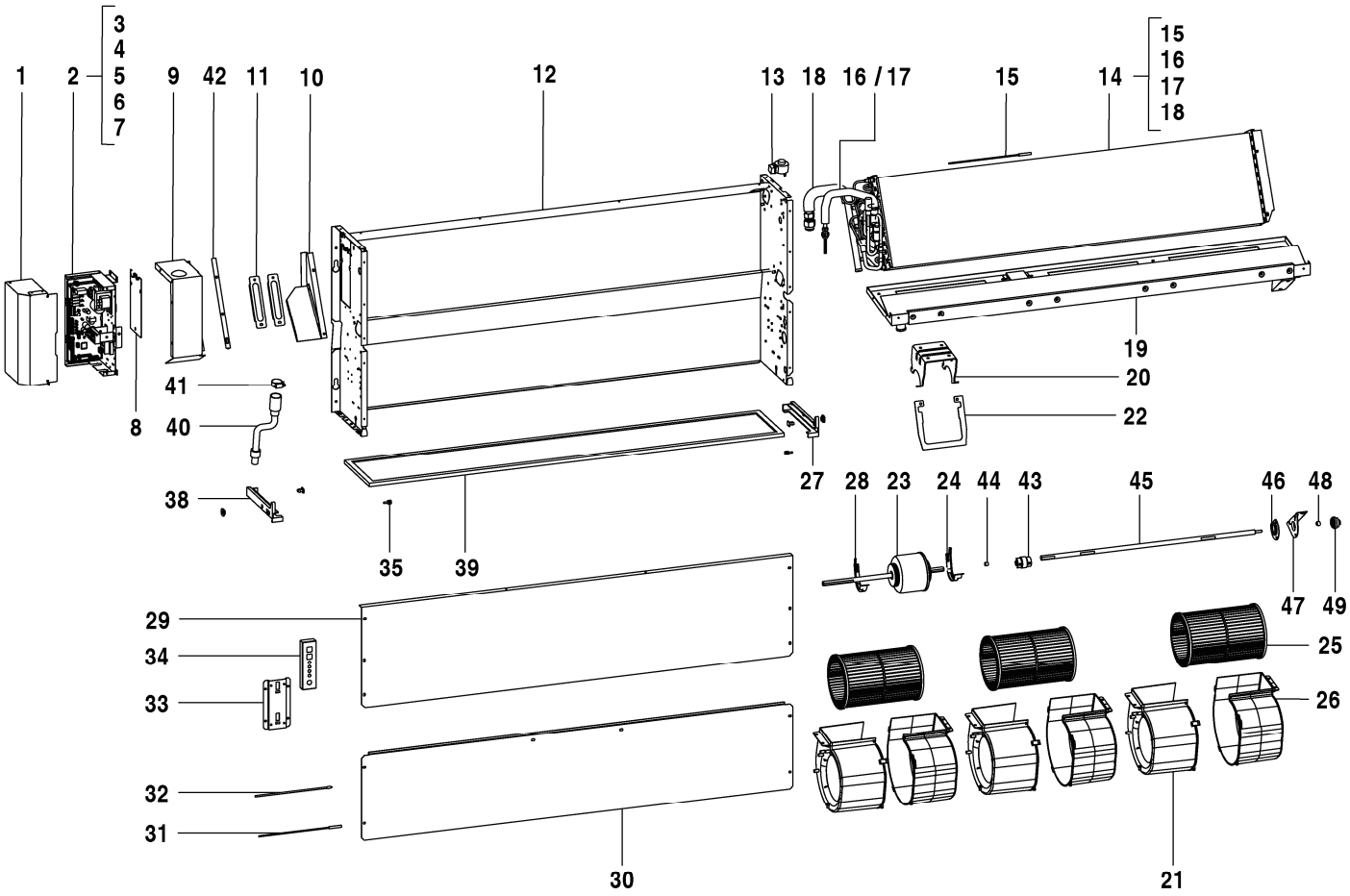

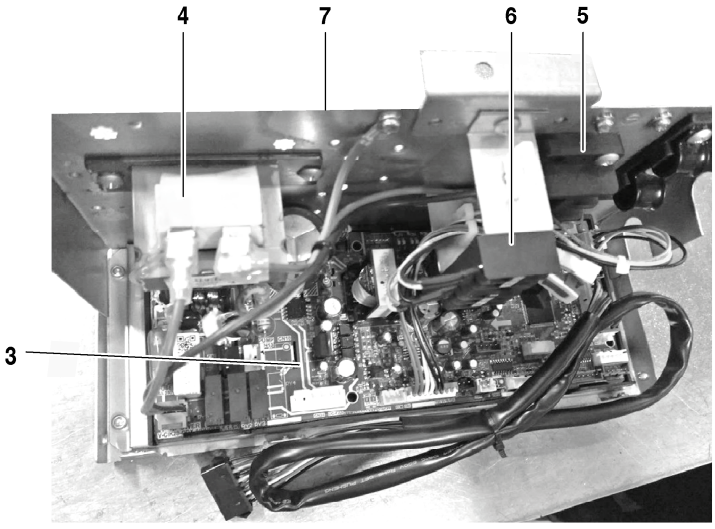

8738894854.aa.RO

AF-F 56-1	7 733 700 988
AF-F 71-1	7 733 700 989

Pos	Description	Ordering no.	F 56-1	F 71-1															Remarks
1	Cover of E-part box	8 733 501 322	■	■															
2	E-part box with electronic components	8 733 501 386	■	■															
3	Indoor unit main PCB	8 733 501 542	■	■															
4	Reactor	8 733 501 650	■	■															
5	Wiring terminal	7 739 834 883	■	■															
6	Wiring terminal	8 733 501 716	■	■															
7	E-part box housing	8 733 501 376	■	■															
8	Board assembly	7 739 834 841	■	■															
9	Mounting plate of evaporator	7 739 834 712	■	■															
10	Mounting plate of evaporator	7 739 834 852	■	■															
11	Supporter	8 733 501 697	■	■															
12	Base assembly	7 739 834 638	■	■															
13	EXV valve coil	7 739 831 358	■	■															
14	Evaporator assembly	7 739 834 700	■	■															
15	Pipe temperature sensor	7 739 834 834	■	■															
16	Evaporator inlet pipe assembly	7 739 834 713	■	■															
17	EXV valve body	7 739 831 491	■	■															
18	Evaporator outlet pipe assembly	7 739 834 819	■	■															
19	Beam, middle	7 739 834 796	■	■															
20	Motor base	7 739 834 803	■	■															
21	Shell of centrifugal fan, right	7 739 834 873	■	■															
22	Board assembly	7 739 834 812	■	■															
23	Brushless DC motor	7 739 834 662	■	■															
24	Cover of motor, right	7 739 831 541	■	■															
25	Centrifugal fan	7 739 834 609	■	■															
26	Shell of centrifugal fan, left	7 739 834 784	■	■															
27	Bracket of air filter	7 739 834 756	■	■															
28	Cover of motor, left	7 739 831 538	■	■															
29	Cover II, top	7 739 834 654	■	■															
30	Cover I, top	7 739 834 653	■	■															
31	Pipe temperature sensor	8 733 501 622	■	■															
32	Room temperature sensor	8 733 501 653	■	■															
33	Supporter	8 733 501 698	■	■															
34	Display board	7 739 834 665	■	■															
38	Bracket of air filter	7 739 834 757	■	■															
39	Air filter	7 739 834 752	■	■															
40	Drainage pipe	7 739 834 876	■	■															
41	Drainage pipe clip	8 733 501 341	■	■															
42	Board assembly	7 739 834 613	■	■															
43	Shaft	7 739 831 632	■	■															
44	Rubber pad	8 733 501 659	■	■															
45	Shaft	7 739 834 643	■	■															
46	Mounting base of bearing	7 739 834 624	■	■															
47	Supporter	7 739 831 883	■	■															
48	Bearing	7 739 831 455	■	■															
49	Bearing base	7 739 831 638	■	■															
	CCB (400mm, SELV adapter)	8 750 501 441	■	■															
	Connection cable AF-IDU	8 750 501 446	■	■															

AF-F 56-1 7 733 700 988

AF-F 71-1 7 733 700 989

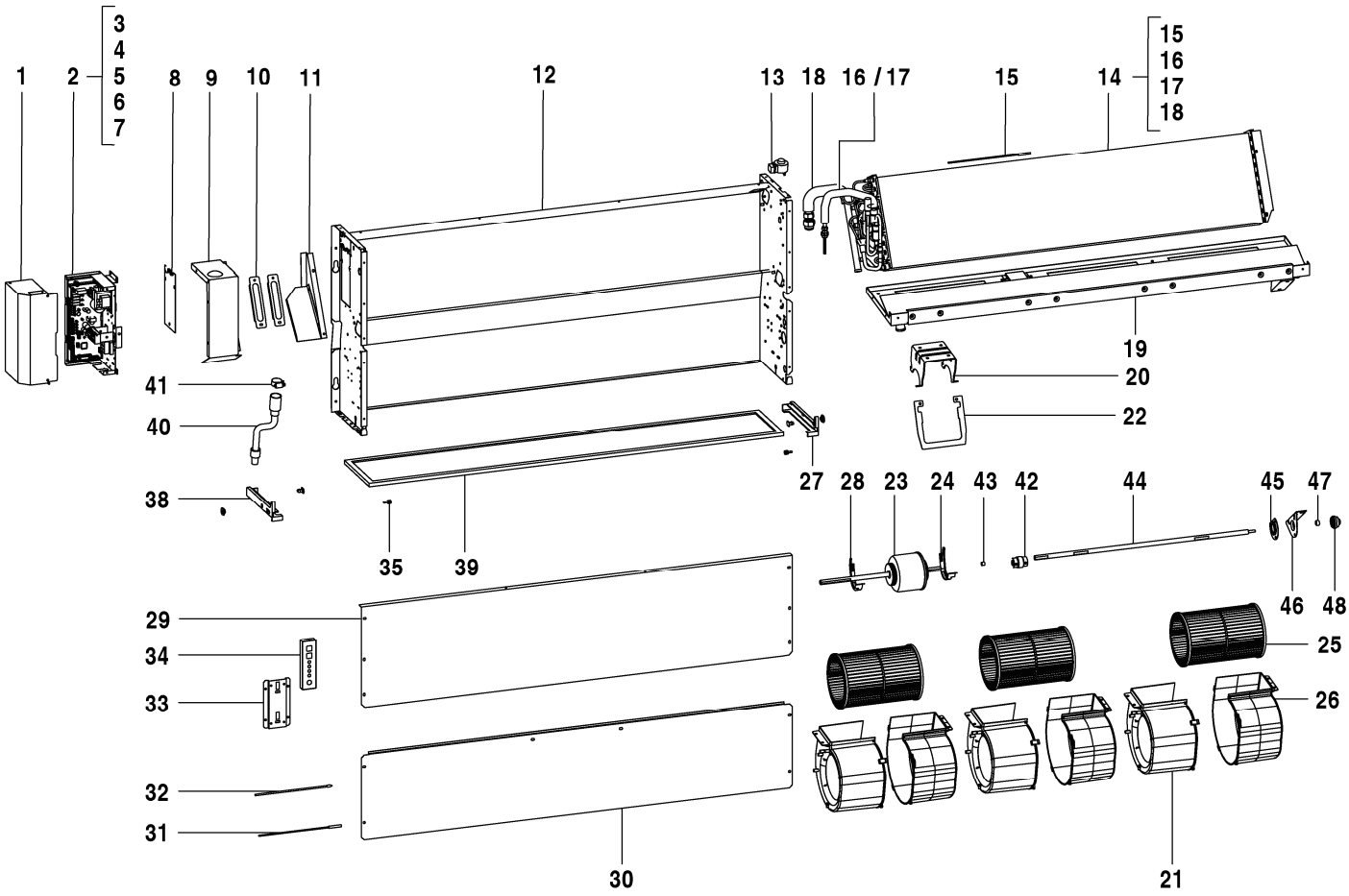

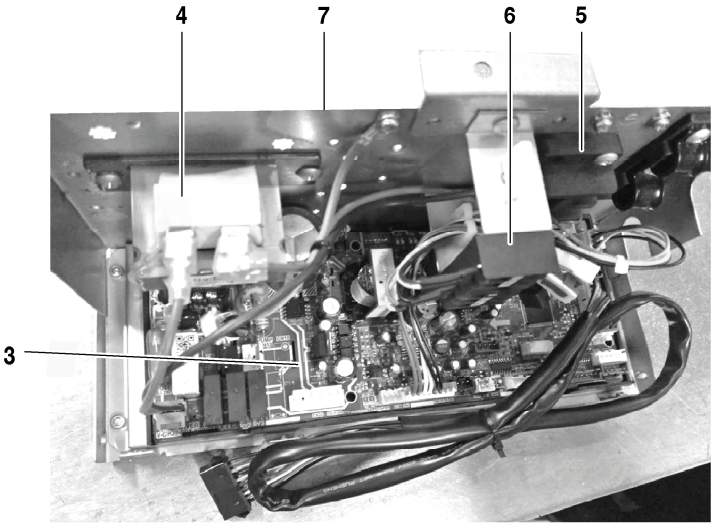

8738894855.aa.RO

AF-F 80-1 7 733 700 990

Pos	Description	Ordering no.	F 80-1																Remarks
1	Cover of E-part box	8 733 501 322	■																
2	E-part box with electronic components	8 733 501 386	■																
3	Indoor unit main PCB	8 733 501 542	■																
4	Reactor	8 733 501 650	■																
5	Wiring terminal	7 739 834 883	■																
6	Wiring terminal	8 733 501 716	■																
7	E-part box housing	8 733 501 376	■																
8	Board assembly	7 739 834 841	■																
9	Mounting plate of evaporator	7 739 834 712	■																
10	Mounting plate of evaporator	7 739 834 852	■																
11	Supporter	8 733 501 697	■																
12	Base assembly	7 739 834 638	■																
13	EXV valve coil	7 739 831 358	■																
14	Evaporator assembly	8 733 501 414	■																
15	Pipe temperature sensor	7 739 834 834	■																
16	Evaporator inlet pipe assembly	8 733 501 472	■																
17	EXV valve body	7 739 831 491	■																
18	Evaporator outlet pipe assembly	8 733 501 497	■																
19	Beam, middle	7 739 834 796	■																
20	Motor base	7 739 834 803	■																
21	Shell of centrifugal fan, right	7 739 834 873	■																
22	Board assembly	7 739 834 812	■																
23	Brushless DC motor	7 739 834 662	■																
24	Cover of motor, right	7 739 831 541	■																
25	Centrifugal fan	7 739 834 609	■																
26	Shell of centrifugal fan, left	7 739 834 784	■																
27	Bracket of air filter	7 739 834 756	■																
28	Cover of motor, left	7 739 831 538	■																
29	Cover II, top	7 739 834 654	■																
30	Cover I, top	7 739 834 653	■																
31	Pipe temperature sensor	8 733 501 622	■																
32	Room temperature sensor	8 733 501 653	■																
33	Supporter	8 733 501 698	■																
34	Display board	7 739 834 665	■																
38	Bracket of air filter	7 739 834 757	■																
39	Air filter	7 739 834 752	■																
40	Drainage pipe	7 739 834 876	■																
41	Drainage pipe clip	8 733 501 341	■																
42	Shaft	7 739 831 632	■																
43	Rubber pad	8 733 501 659	■																
44	Shaft	7 739 834 643	■																
45	Mounting base of bearing	7 739 834 624	■																
46	Supporter	7 739 831 883	■																
47	Bearing	7 739 831 455	■																
48	Bearing base	7 739 831 638	■																
	CCB (400mm, SELV adapter)	8 750 501 441	■																
	Connection cable AF-IDU	8 750 501 446	■																

Spare parts list

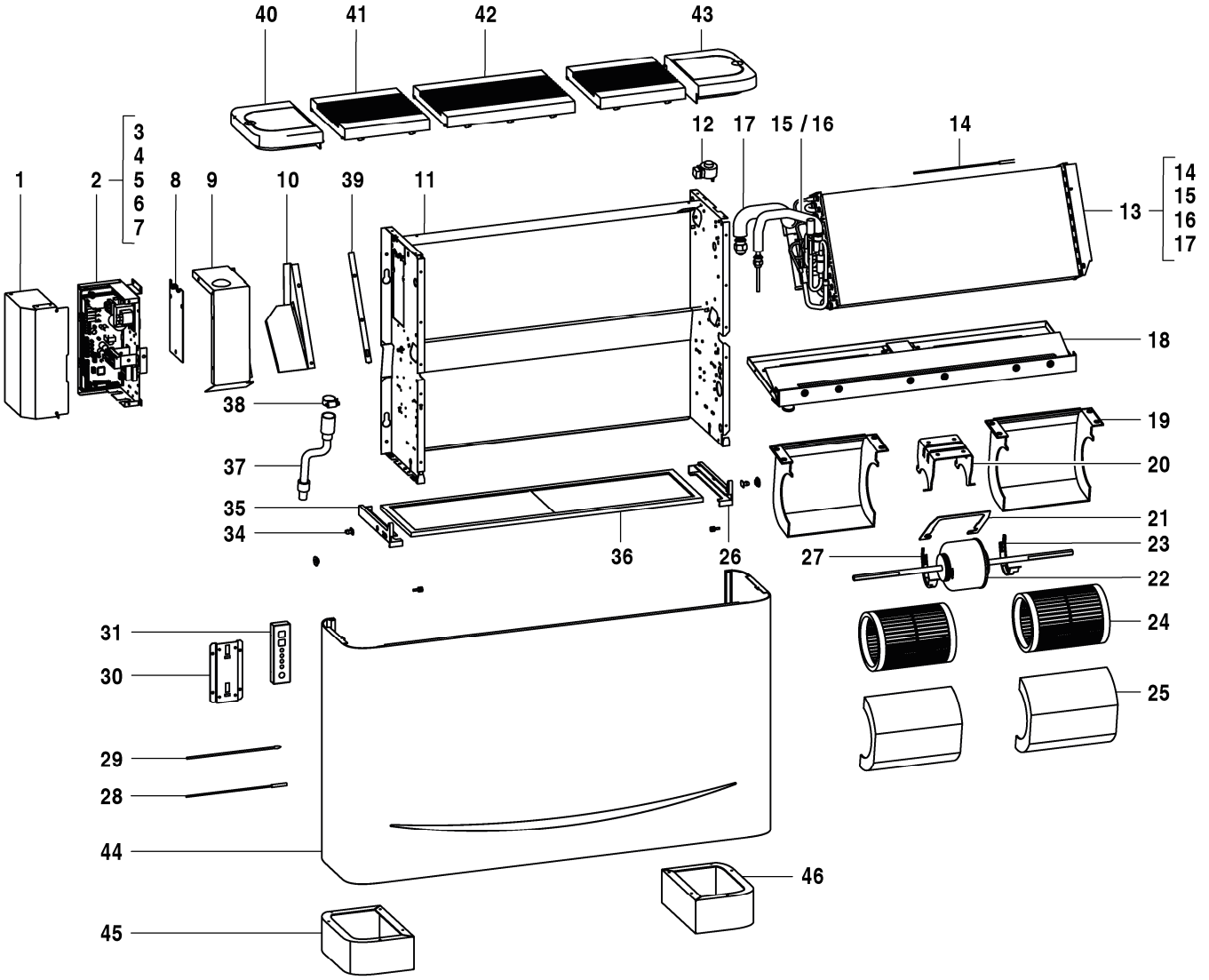

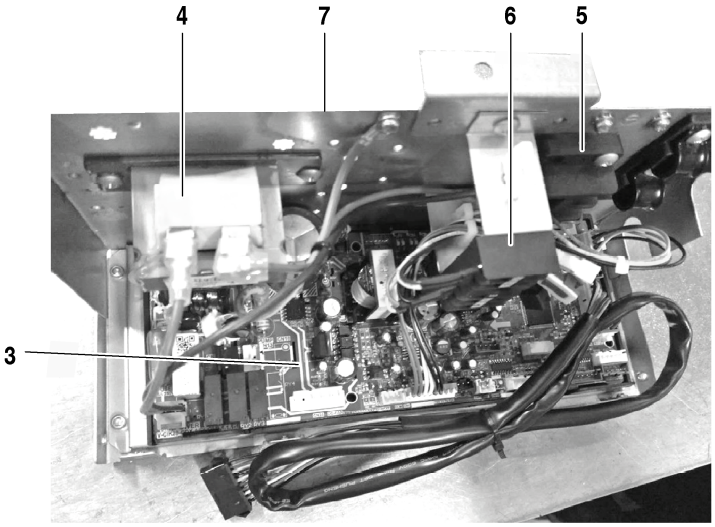

8738894845.aa.RO

AF-FC 22-1	7 733 700 977
AF-FC 28-1	7 733 700 978

Pos	Description	Ordering no.	FC 22-1	FC 28-1															Remarks
1	Cover of E-part box	8 733 501 322	■	■															
2	E-part box with electronic components	8 733 501 387	■	■															
3	Indoor unit main PCB	8 733 501 543	■	■															
4	Reactor	8 733 501 650	■	■															
5	Wiring terminal	7 739 834 883	■	■															
6	Wiring terminal	8 733 501 716	■	■															
7	E-part box housing	8 733 501 376	■	■															
8	Board assembly	7 739 834 841	■	■															
9	Mounting plate of evaporator	7 739 834 712	■	■															
10	Mounting plate of evaporator	7 739 834 852	■	■															
11	Base assembly	7 739 834 616	■	■															
12	EXV valve coil	7 739 831 358	■	■															
13	Evaporator assembly	7 739 834 728	■	■															
14	Pipe temperature sensor	7 739 834 834	■	■															
15	Evaporator inlet pipe assembly	7 739 834 729	■	■															
16	EXV valve body	7 739 831 491	■	■															
17	Evaporator outlet pipe assembly	7 739 834 817	■	■															
18	Beam, middle	7 739 834 797	■	■															
19	Motor base	7 739 834 803	■	■															
20	Shell of centrifugal fan, down	7 739 834 874	■	■															
21	Board assembly	7 739 834 812	■	■															
22	Brushless DC motor	7 739 834 661	■	■															
23	Cover of motor, right	7 739 831 541	■	■															
24	Centrifugal fan	7 739 834 610	■	■															
25	Shell of centrifugal fan, up	7 739 834 875	■	■															
26	Bracket of air filter	7 739 834 756	■	■															
27	Cover of motor, left	7 739 831 538	■	■															
28	Pipe temperature sensor	8 733 501 622	■	■															
29	Room temperature sensor	8 733 501 653	■	■															
30	Supporter	8 733 501 698	■	■															
31	Display board	7 739 834 665	■	■															
35	Bracket of air filter	7 739 834 757	■	■															
36	Air filter	7 739 834 750	■	■															
37	Drainage pipe	7 739 834 876	■	■															
38	Drainage pipe clip	8 733 501 341	■	■															
39	Board assembly	7 739 834 613	■	■															
40	Cover, left	7 739 834 918	■	■															
41	Grille assembly	7 739 834 932	■	■															
42	Grille assembly	7 739 834 919	■	■															
43	Cover, right	7 739 834 920	■	■															
44	Shell subassembly	7 739 834 929	■	■															
45	Left foot, floor standing unit	7 739 834 925	■	■															
46	Right foot, floor standing unit	7 739 834 926	■	■															
	CCB (400mm, SELV adapter)	8 750 501 441	■	■															
	Connection cable AF-IDU	8 750 501 446	■	■															

AF-FC 22-1 7 733 700 977

AF-FC 28-1 7 733 700 978

Spare parts list

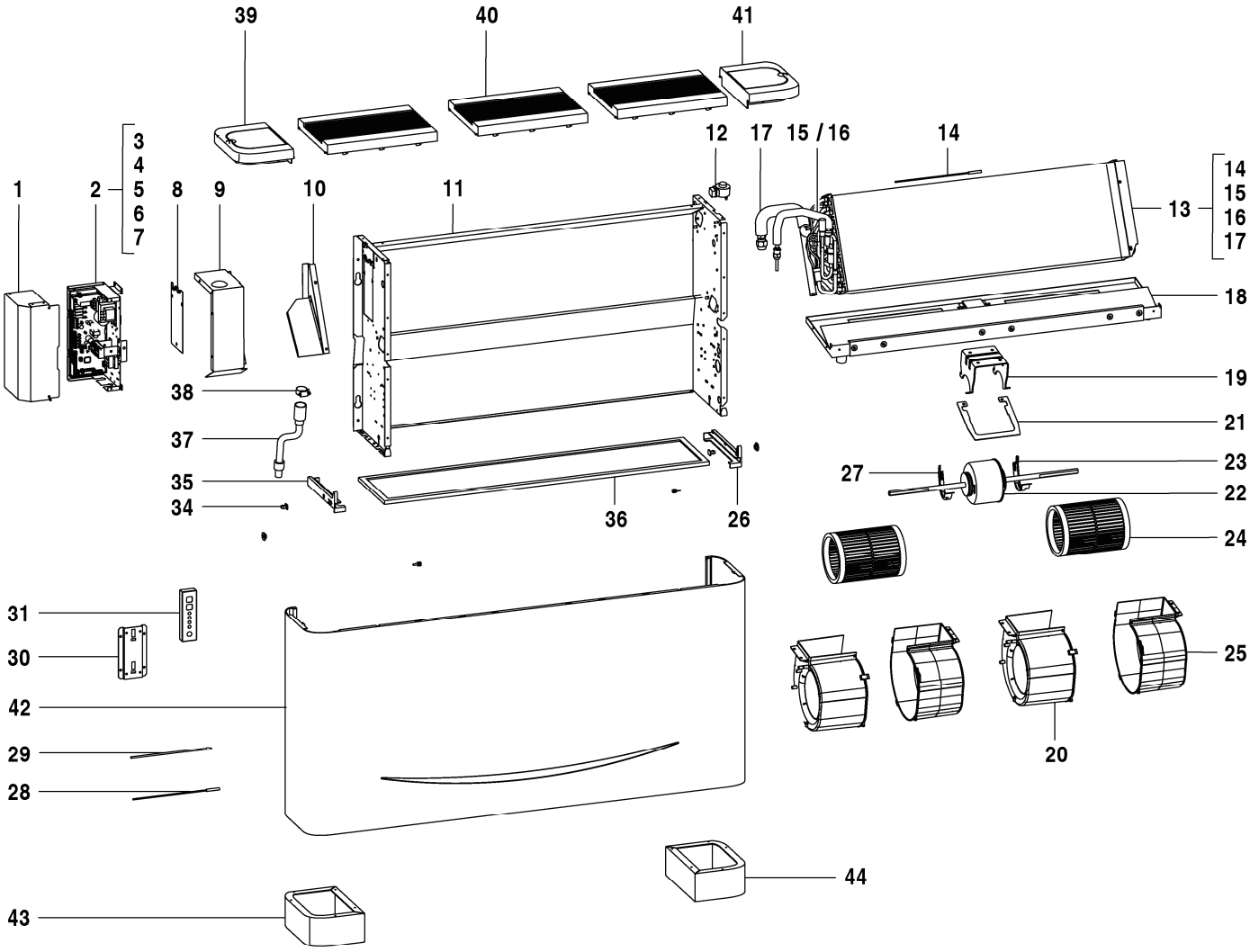

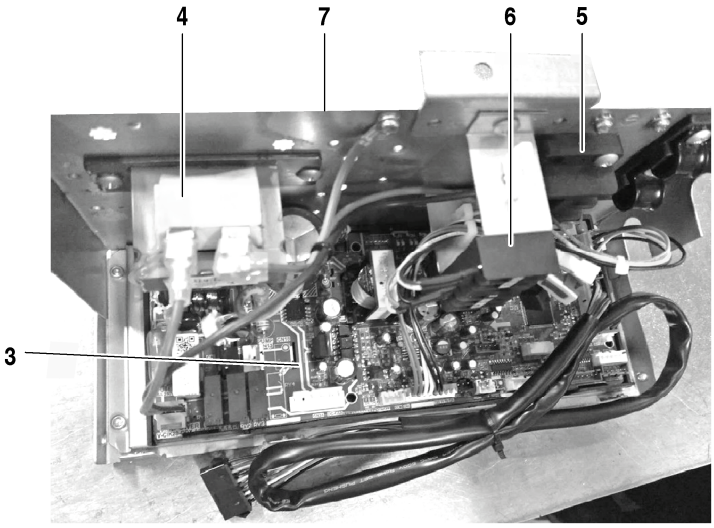

8738894846.aa.RO

AF-FC 36-1	7 733 700 979
AF-FC 45-1	7 733 700 980

Pos	Description	Ordering no.	FC 36-1	FC 45-1															Remarks
1	Cover of E-part box	8 733 501 322	■	■															
2	E-part box with electronic components	8 733 501 387	■	■															
3	Indoor unit main PCB	8 733 501 543	■	■															
4	Reactor	8 733 501 650	■	■															
5	Wiring terminal	7 739 834 883	■	■															
6	Wiring terminal	8 733 501 716	■	■															
7	E-part box housing	8 733 501 376	■	■															
8	Board assembly	7 739 834 841	■	■															
9	Mounting plate of evaporator	7 739 834 712	■	■															
10	Mounting plate of evaporator	7 739 834 852	■	■															
11	Base assembly	7 739 834 617	■	■															
12	EXV valve coil	7 739 831 358	■	■															
13	Evaporator assembly	7 739 834 727	■	■															
14	Pipe temperature sensor	7 739 834 834	■	■															
15	Evaporator inlet pipe assembly	7 739 834 714	■	■															
16	EXV valve body	7 739 831 491	■	■															
17	Evaporator outlet pipe assembly	7 739 834 818	■	■															
18	Beam, middle	7 739 834 795	■	■															
19	Motor base	7 739 834 803	■	■															
20	Shell of centrifugal fan, right	7 739 834 873	■	■															
21	Board assembly	7 739 834 812	■	■															
22	Brushless DC motor	7 739 834 661	■	■															
23	Cover of motor, right	7 739 831 541	■	■															
24	Centrifugal fan	7 739 834 609	■	■															
25	Shell of centrifugal fan, left	7 739 834 784	■	■															
26	Bracket of air filter	7 739 834 756	■	■															
27	Cover of motor, left	7 739 831 538	■	■															
28	Pipe temperature sensor	8 733 501 622	■	■															
29	Room temperature sensor	8 733 501 653	■	■															
30	Supporter	8 733 501 698	■	■															
31	Display board	7 739 834 665	■	■															
35	Bracket of air filter	7 739 834 757	■	■															
36	Air filter	7 739 834 751	■	■															
37	Drainage pipe	7 739 834 876	■	■															
38	Drainage pipe clip	8 733 501 341	■	■															
39	Cover, left	7 739 834 918	■	■															
40	Grille assembly	7 739 834 919	■	■															
41	Cover, right	7 739 834 920	■	■															
42	Shell subassembly	7 739 834 921	■	■															
43	Left foot, floor standing unit	7 739 834 925	■	■															
44	Right foot, floor standing unit	7 739 834 926	■	■															
	CCB (400mm, SELV adapter)	8 750 501 441	■	■															
	Connection cable AF-IDU	8 750 501 446	■	■															

AF-FC 36-1 7 733 700 979

AF-FC 45-1 7 733 700 980

Spare parts list

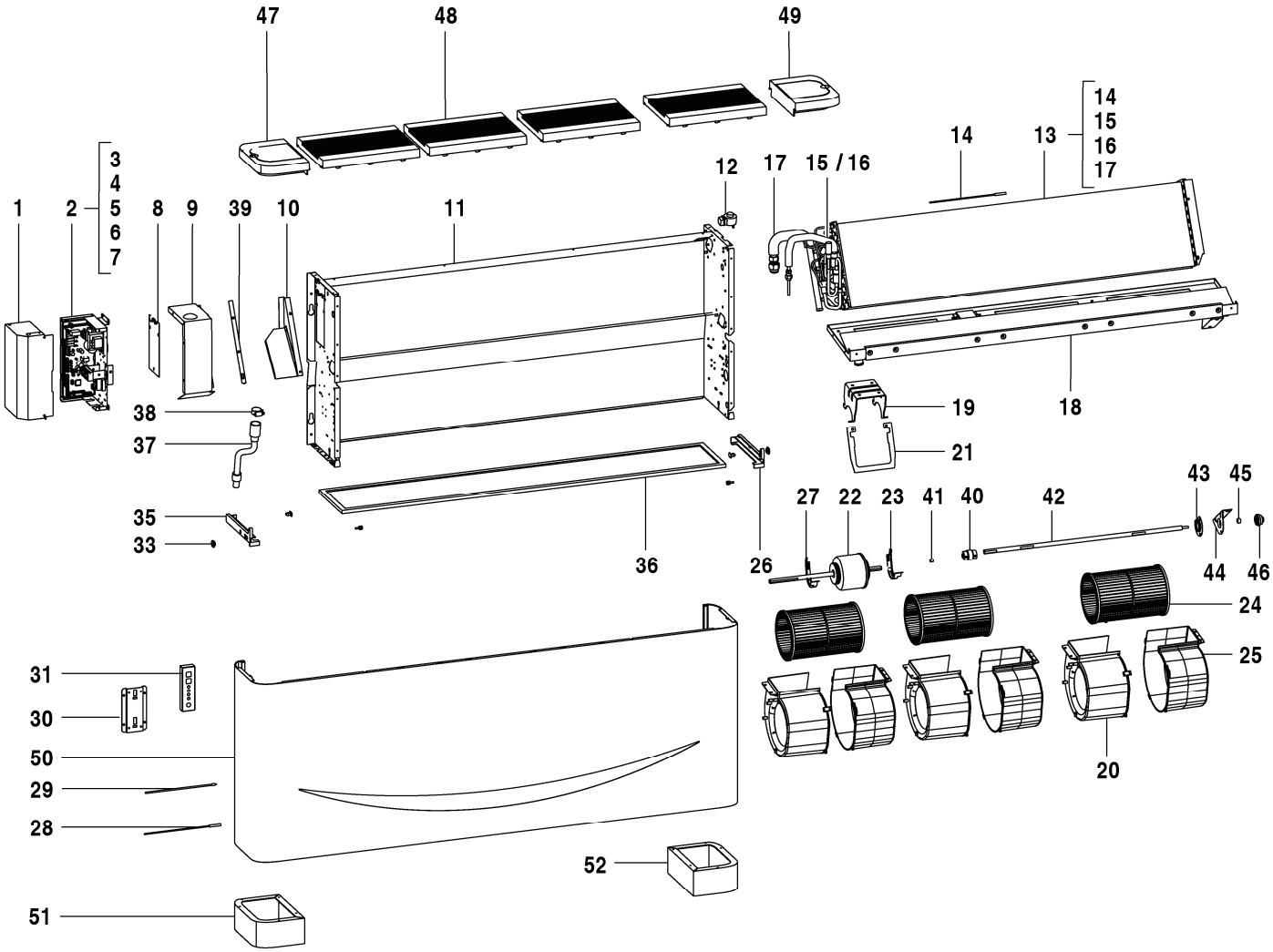

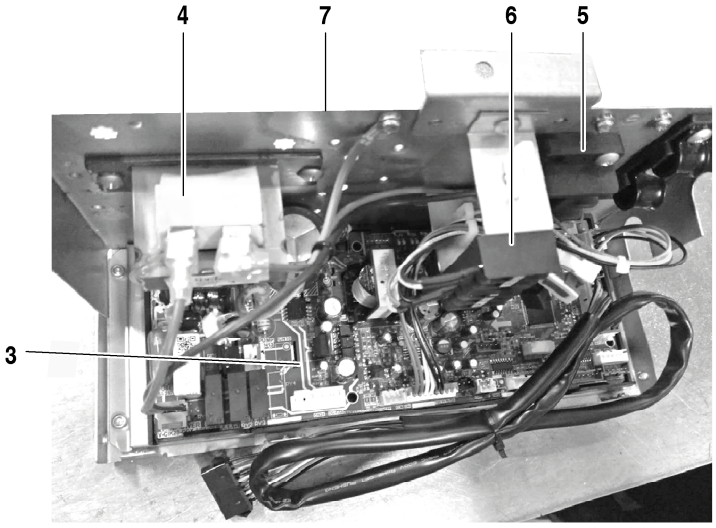

8738894847.aa.RO

AF-FC 56-1	7 733 700 981
AF-FC 71-1	7 733 700 982

Pos	Description	Ordering no.	FC 56-1	FC 71-1															Remarks
1	Cover of E-part box	8 733 501 322	■	■															
2	E-part box with electronic components	8 733 501 387	■	■															
3	Indoor unit main PCB	8 733 501 543	■	■															
4	Reactor	8 733 501 650	■	■															
5	Wiring terminal	7 739 834 883	■	■															
6	Wiring terminal	8 733 501 716	■	■															
7	E-part box housing	8 733 501 376	■	■															
8	Board assembly	7 739 834 841	■	■															
9	Mounting plate of evaporator	7 739 834 712	■	■															
10	Mounting plate of evaporator	7 739 834 852	■	■															
11	Base assembly	7 739 834 638	■	■															
12	EXV valve coil	7 739 831 358	■	■															
13	Evaporator assembly	7 739 834 700	■	■															
14	Pipe temperature sensor	7 739 834 834	■	■															
15	Evaporator inlet pipe assembly	7 739 834 713	■	■															
16	EXV valve body	7 739 831 491	■	■															
17	Evaporator outlet pipe assembly	7 739 834 819	■	■															
18	Beam, middle	7 739 834 796	■	■															
19	Motor base	7 739 834 803	■	■															
20	Shell of centrifugal fan, right	7 739 834 873	■	■															
21	Board assembly	7 739 834 812	■	■															
22	Brushless DC motor	7 739 834 662	■	■															
23	Cover of motor, right	7 739 831 541	■	■															
24	Centrifugal fan	7 739 834 609	■	■															
25	Shell of centrifugal fan, left	7 739 834 784	■	■															
26	Bracket of air filter	7 739 834 756	■	■															
27	Cover of motor, left	7 739 831 538	■	■															
28	Pipe temperature sensor	8 733 501 622	■	■															
29	Room temperature sensor	8 733 501 653	■	■															
30	Supporter	8 733 501 698	■	■															
31	Display board	7 739 834 665	■	■															
35	Bracket of air filter	7 739 834 757	■	■															
36	Air filter	7 739 834 752	■	■															
37	Drainage pipe	7 739 834 876	■	■															
38	Drainage pipe clip	8 733 501 341	■	■															
39	Board assembly	7 739 834 613	■	■															
40	Shaft	7 739 831 632	■	■															
41	Rubber pad	8 733 501 659	■	■															
42	Shaft	7 739 834 643	■	■															
43	Mounting base of bearing	7 739 834 624	■	■															
44	Supporter	7 739 831 883	■	■															
45	Bearing	7 739 831 455	■	■															
46	Bearing base	7 739 831 638	■	■															
47	Cover, left	7 739 834 918	■	■															
48	Grille assembly	7 739 834 919	■	■															
49	Cover, right	7 739 834 920	■	■															
50	Shell subassembly	7 739 834 935	■	■															
51	Left foot, floor standing unit	7 739 834 925	■	■															
52	Right foot, floor standing unit	7 739 834 926	■	■															
	CCB (400mm, SELV adapter)	8 750 501 441	■	■															
	Connection cable AF-IDU	8 750 501 446	■	■															

AF-FC 56-1	7 733 700 981
AF-FC 71-1	7 733 700 982

Spare parts list

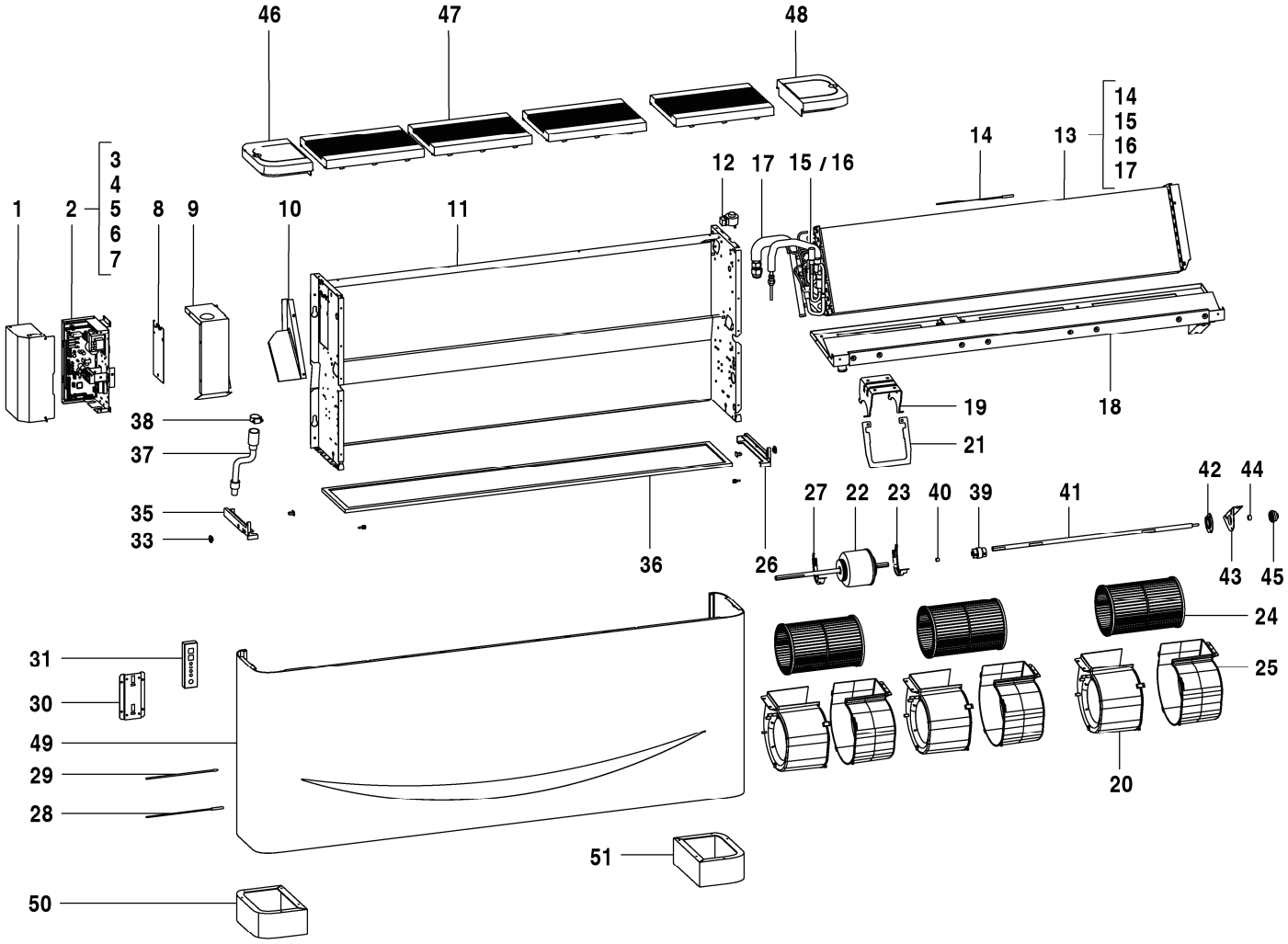

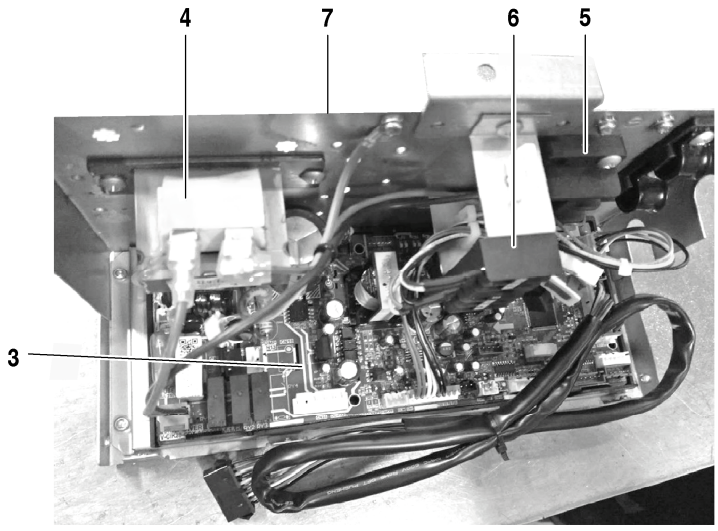

8738894848.aa.RO

AF-FC 80-1 7 733 700 983

Pos	Description	Ordering no.	FC 80-1																	Remarks
1	Cover of E-part box	8 733 501 322	■																	
2	E-part box with electronic components	8 733 501 387	■																	
3	Indoor unit main PCB	8 733 501 543	■																	
4	Reactor	8 733 501 650	■																	
5	Wiring terminal	7 739 834 883	■																	
6	Wiring terminal	8 733 501 716	■																	
7	E-part box housing	8 733 501 376	■																	
8	Board assembly	7 739 834 841	■																	
9	Mounting plate of evaporator	7 739 834 712	■																	
10	Mounting plate of evaporator	7 739 834 852	■																	
11	Base assembly	7 739 834 638	■																	
12	EXV valve coil	7 739 831 358	■																	
13	Evaporator assembly	8 733 501 414	■																	
14	Pipe temperature sensor	7 739 834 834	■																	
15	Evaporator inlet pipe assembly	8 733 501 472	■																	
16	EXV valve body	7 739 831 491	■																	
17	Evaporator outlet pipe assembly	8 733 501 497	■																	
18	Beam, middle	7 739 834 796	■																	
19	Motor base	7 739 834 803	■																	
20	Shell of centrifugal fan, right	7 739 834 873	■																	
21	Board assembly	7 739 834 812	■																	
22	Brushless DC motor	7 739 834 662	■																	
23	Cover of motor, right	7 739 831 541	■																	
24	Centrifugal fan	7 739 834 609	■																	
25	Shell of centrifugal fan, left	7 739 834 784	■																	
26	Bracket of air filter	7 739 834 756	■																	
27	Cover of motor, left	7 739 831 538	■																	
28	Pipe temperature sensor	8 733 501 622	■																	
29	Room temperature sensor	8 733 501 653	■																	
30	Supporter	8 733 501 698	■																	
31	Display board	7 739 834 665	■																	
36	Bracket of air filter	7 739 834 757	■																	
37	Air filter	7 739 834 752	■																	
38	Drainage pipe	7 739 834 876	■																	
39	Drainage pipe clip	8 733 501 341	■																	
40	Shaft	7 739 831 632	■																	
41	Rubber pad	8 733 501 659	■																	
42	Shaft	7 739 834 643	■																	
43	Mounting base of bearing	7 739 834 624	■																	
44	Supporter	7 739 831 883	■																	
45	Bearing	7 739 831 455	■																	
46	Bearing base	7 739 831 638	■																	
47	Cover, left	7 739 834 918	■																	
48	Grille assembly	7 739 834 919	■																	
49	Cover, right	7 739 834 920	■																	
50	Shell subassembly	7 739 834 935	■																	
51	Left foot, floor standing unit	7 739 834 925	■																	
52	Right foot, floor standing unit	7 739 834 926	■																	
	CCB (400mm, SELV adapter)	8 750 501 441	■																	
	Connection cable AF-IDU	8 750 501 446	■																	

AF-FC 80-1 7 733 700 983

Spare parts list

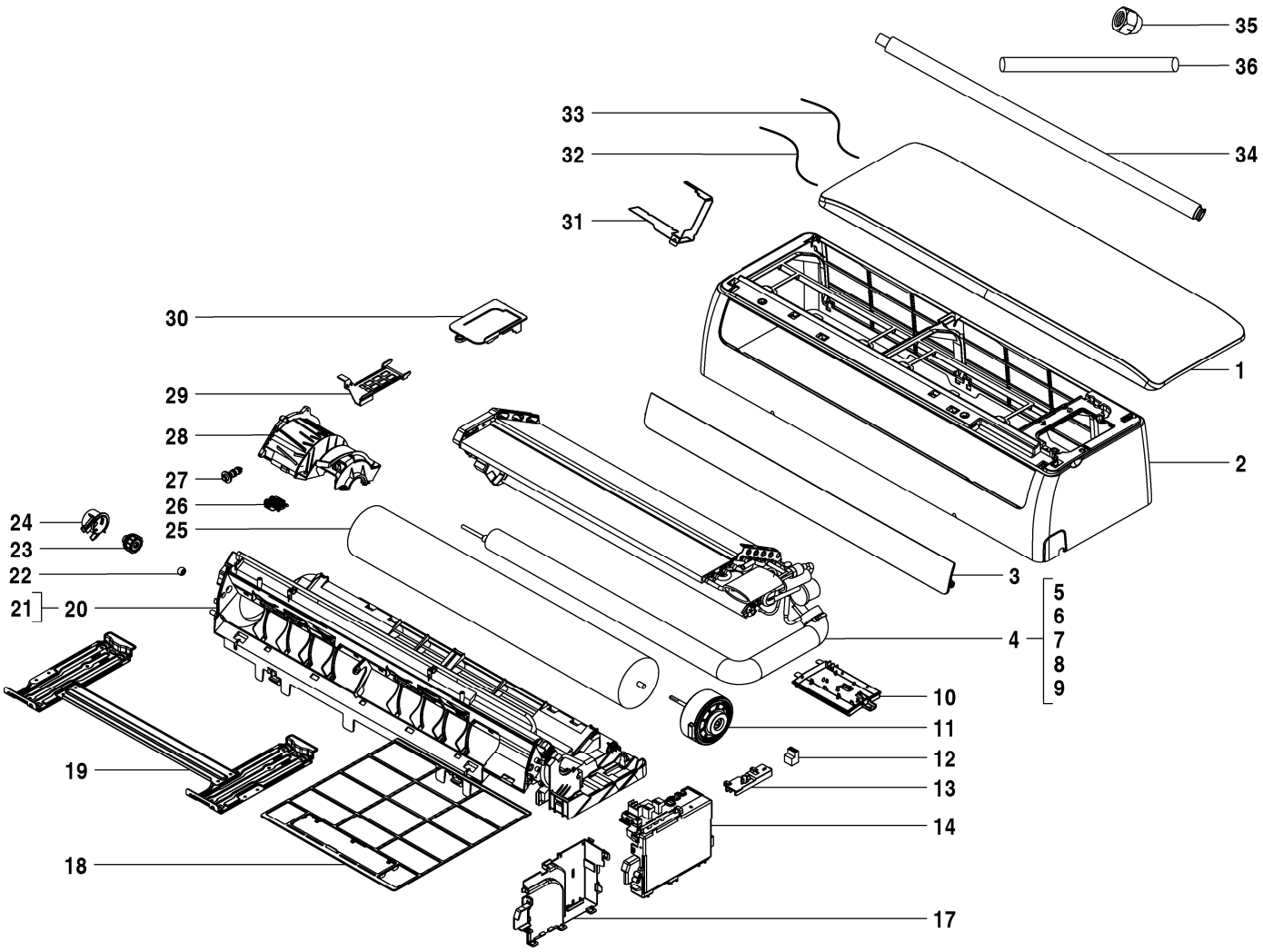

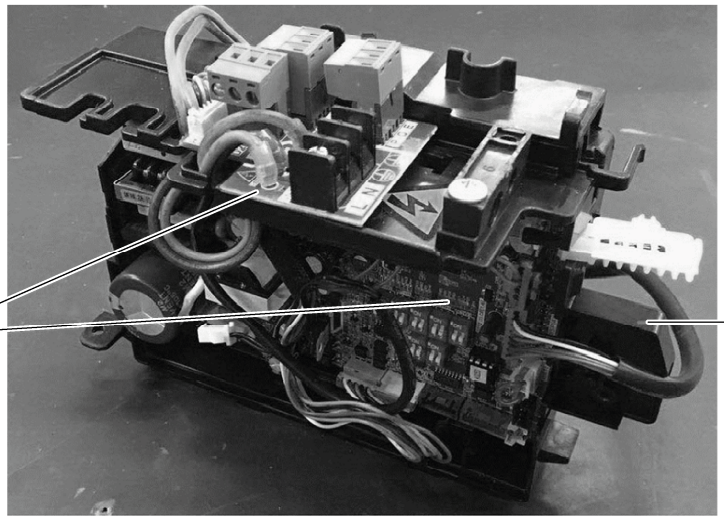

6721903755.aa.RO

AF-W 17-1 7 733 701 480

Pos	Description	Ordering no.	W 17-1																	Remarks
1	Panel	8 750 501 553	■																	
2	Panel frame assembly	7 739 834 823	■																	
3	Louver	7 739 834 788	■																	
4	Evaporator assembly	8 733 501 457	■																	
5	Pipe temperature sensor	8 733 501 624	■																	
6	Evaporator inlet pipe assembly	7 739 834 715	■																	
7	Electronic expansion valve	8 750 501 554	■																	
8	Evaporator outlet pipe assembly	7 739 834 721	■																	
9	Evaporator assembly	8 733 501 428	■																	
10	Display board	8 733 501 336	■																	
11	Brushless DC motor	7 739 834 658	■																	
12	Connector	7 739 834 880	■																	
13	Cover of E-part box	7 739 834 689	■																	
14	Control box	8 750 501 439	■																	
15	E-part box housing	7 739 834 681	■																	
16	Indoor unit main board	8 750 501 463	■																	
17	E-part box housing	7 739 834 680	■																	
18	Air filter	7 739 834 747	■																	
18	Air filter	7 739 834 763	■																	
19	Mounting plate	7 739 834 778	■																	
20	Chassis assembly	7 739 834 620	■																	
21	Step motor	7 739 834 736	■																	
22	Bearing	7 739 831 455	■																	
23	Bearing base	7 739 834 627	■																	
24	Bearing base	7 739 834 628	■																	
25	Cross flow fan	7 739 834 655	■																	
26	Temperature sensor clip	7 739 834 855	■																	
27	Water pipe plug	7 739 834 667	■																	
28	Cover of motor	7 739 834 807	■																	
29	Pipe clamp assembly	7 739 834 829	■																	
30	Cover of E-part box	8 733 501 312	■																	
31	E-Part box fire-proof plate	8 733 501 367	■																	
32	Pipe temperature sensor	7 739 831 461	■																	
33	Pipe temperature sensor	7 739 834 856	■																	
34	Drainage pipe	7 739 832 011	■																	
35	Brass nut	8 750 501 555	■																	
35	Brass nut	8 750 501 556	■																	
36	Drainage pipe	8 733 501 338	■																	

AF-W 17-1 7 733 701 480

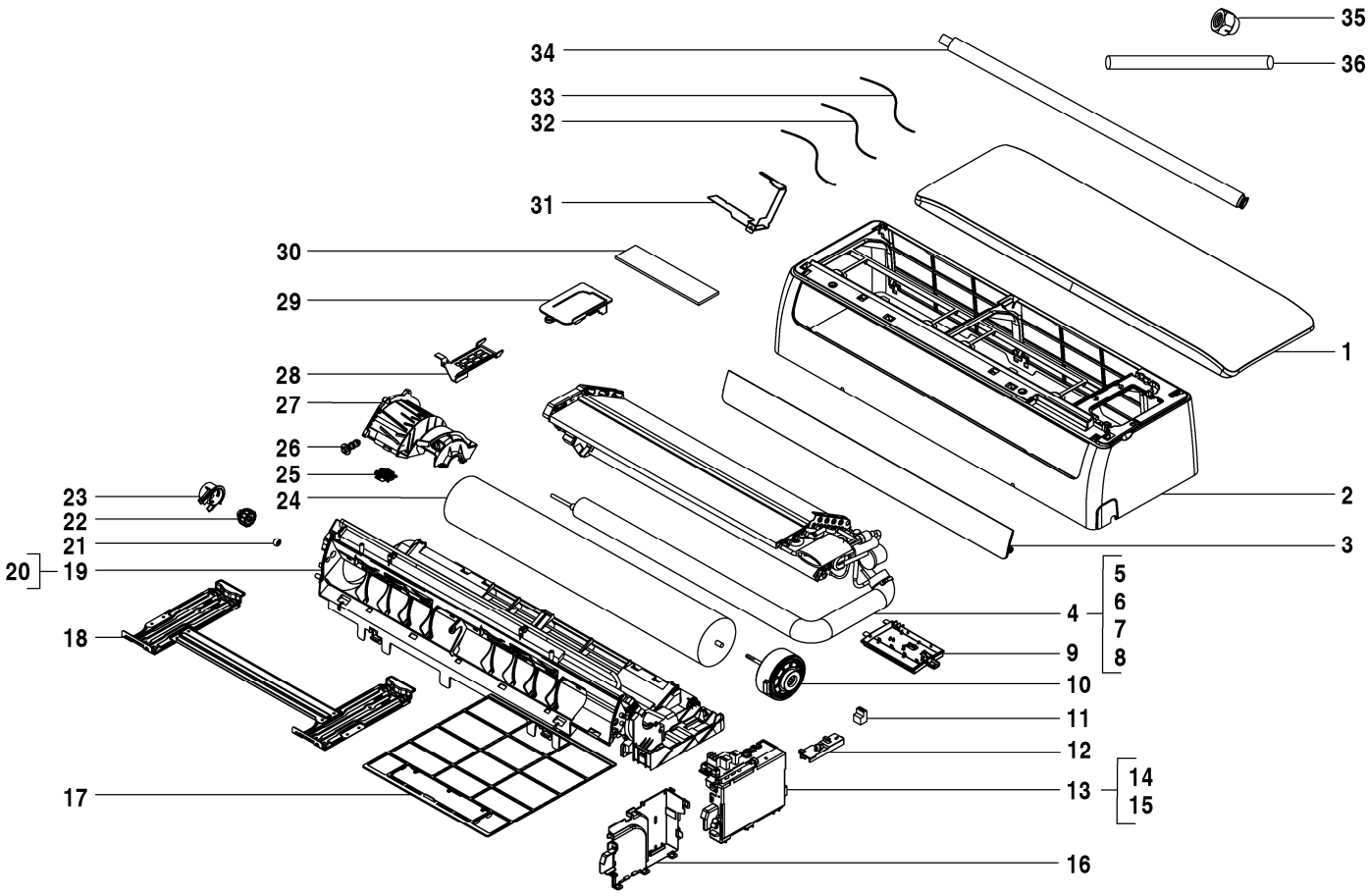

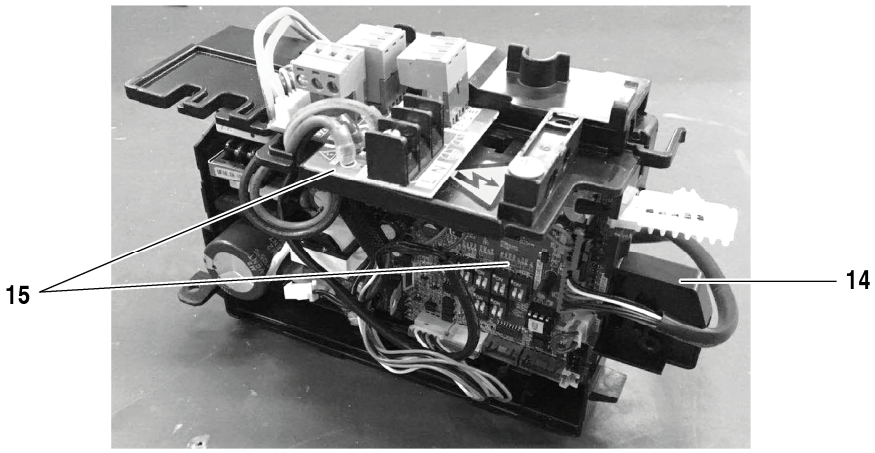

8738894916.aa.RO

Pos	Description	Ordering no.	W 22-1																	Remarks
1	Panel	8 733 501 606	■																	
2	Panel frame assembly	7 739 834 823	■																	
3	Louver	7 739 834 788	■																	
4	Evaporator assembly	8 733 501 457	■																	
5	Pipe temperature sensor	8 733 501 624	■																	
6	Evaporator inlet pipe assembly	7 739 834 715	■																	
7	Evaporator outlet pipe assembly	7 739 834 721	■																	
8	Evaporator assembly	8 733 501 428	■																	
9	Display board	8 733 501 336	■																	
10	Brushless DC motor	7 739 834 658	■																	
11	Connector	7 739 834 880	■																	
12	Cover of E-part box	7 739 834 689	■																	
13	E-part box with electronic components	8 733 501 397	■																	
14	E-part box housing	7 739 834 681	■																	
15	Main control board IDU	8 750 501 440	■																	
16	E-part box housing	7 739 834 680	■																	
17	Air filter	7 739 834 747	■																	
18	Mounting plate	7 739 834 778	■																	
19	Chassis assembly	7 739 834 620	■																	
20	Step motor	7 739 834 736	■																	
21	Bearing	7 739 831 455	■																	
22	Bearing base	7 739 834 627	■																	
23	Bearing base	7 739 834 628	■																	
24	Cross flow fan	7 739 834 655	■																	
25	Temperature sensor clip	7 739 834 855	■																	
26	Water pipe plug	7 739 834 667	■																	
27	Cover of motor	7 739 834 807	■																	
28	Pipe clamp assembly	7 739 834 829	■																	
29	Cover of E-part box	8 733 501 312	■																	
30	Air filter	7 739 834 763	■																	
31	E-Part box fire-proof plate	8 733 501 367	■																	
32	Pipe temperature sensor	7 739 831 461	■																	
33	Pipe temperature sensor	7 739 834 856	■																	
34	Drainage pipe	7 739 832 011	■																	
35	Copper nut	7 739 836 222	■																	
36	Drainage pipe	8 733 501 338	■																	
	CCB (400mm, SELV adapter)	8 750 501 441	■																	

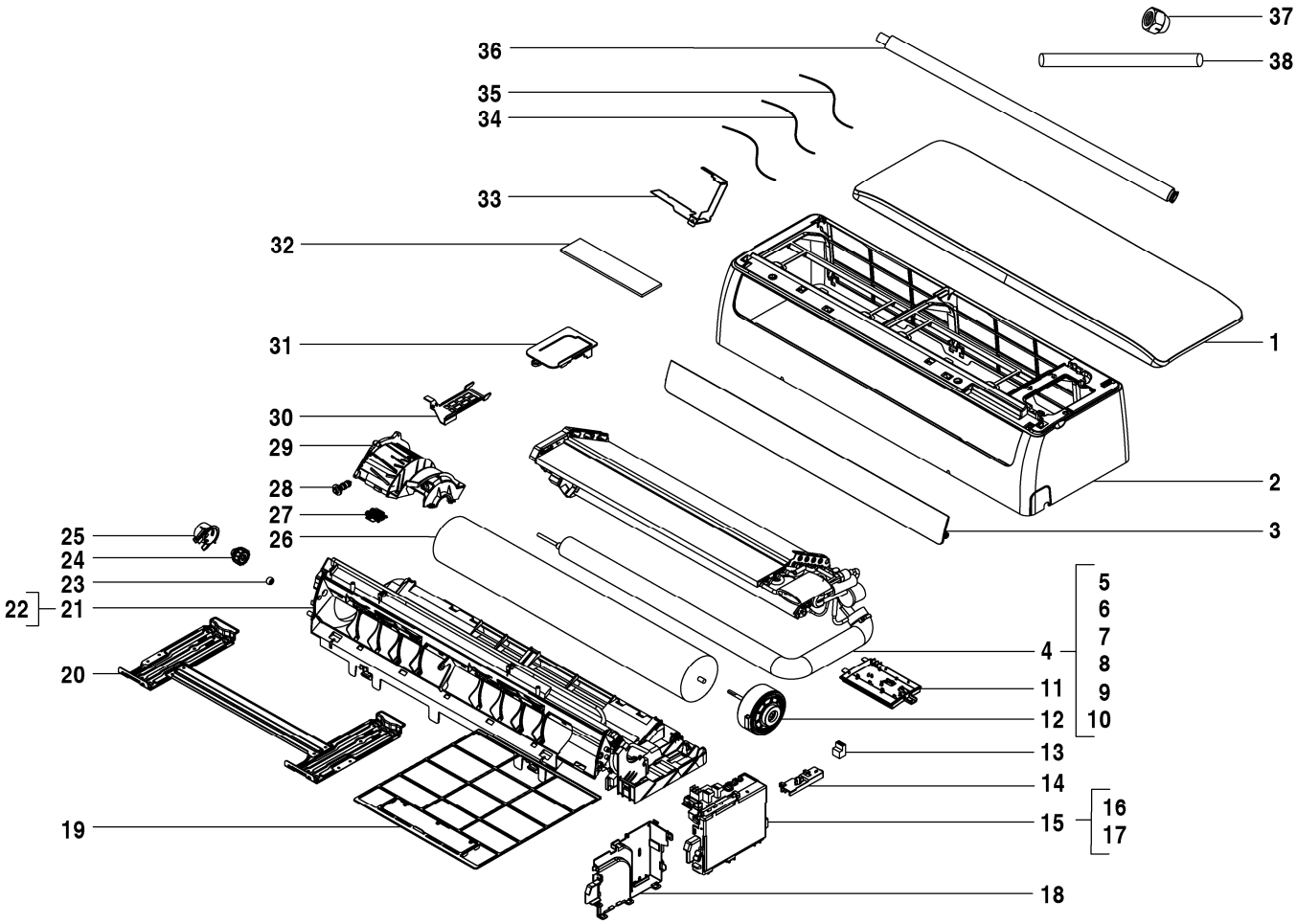

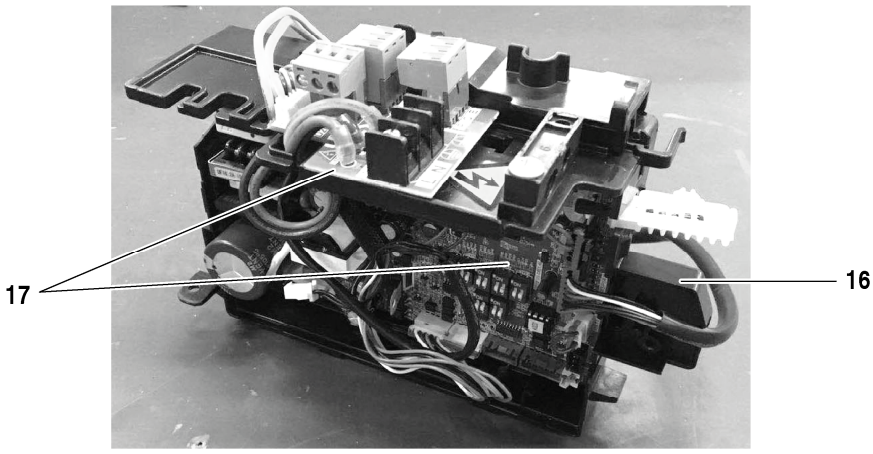

8738894917.aa.RO

Pos	Description	Ordering no.	W 28-1																	Remarks
1	Panel	8 733 501 606	■																	
2	Panel frame assembly	7 739 834 823	■																	
3	Louver	7 739 834 788	■																	
4	Evaporator assembly	8 733 501 456	■																	
5	Pipe temperature sensor	8 733 501 624	■																	
6	Evaporator inlet pipe assembly	7 739 834 716	■																	
7	Evaporator outlet pipe assembly	7 739 834 722	■																	
8	Evaporator assembly	8 733 501 421	■																	
9	Evaporator assembly	8 733 501 420	■																	
10	Evaporator assembly	8 733 501 419	■																	
11	Display board	8 733 501 336	■																	
12	Brushless DC motor	7 739 834 658	■																	
13	Connector	7 739 834 880	■																	
14	Cover of E-part box	7 739 834 689	■																	
15	E-part box with electronic components	8 733 501 397	■																	
16	E-part box housing	7 739 834 681	■																	
17	Main control board IDU	8 750 501 440	■																	
18	E-part box housing	7 739 834 680	■																	
19	Air filter	7 739 834 747	■																	
20	Mounting plate	7 739 834 778	■																	
21	Chassis assembly	7 739 834 620	■																	
22	Step motor	7 739 834 736	■																	
23	Bearing	7 739 831 455	■																	
24	Bearing base	7 739 834 627	■																	
25	Bearing base	7 739 834 628	■																	
26	Cross flow fan	7 739 834 655	■																	
27	Temperature sensor clip	7 739 834 855	■																	
28	Water pipe plug	7 739 834 667	■																	
29	Cover of motor	7 739 834 807	■																	
30	Pipe clamp assembly	7 739 834 829	■																	
31	Cover of E-part box	8 733 501 312	■																	
32	Air filter	7 739 834 763	■																	
33	E-Part box fire-proof plate	8 733 501 367	■																	
34	Pipe temperature sensor	7 739 831 461	■																	
35	Pipe temperature sensor	7 739 834 856	■																	
36	Drainage pipe	7 739 832 011	■																	
37	Copper nut	7 739 836 222	■																	
38	Drainage pipe	8 733 501 338	■																	
	CCB (400mm, SELV adapter)	8 750 501 441	■																	

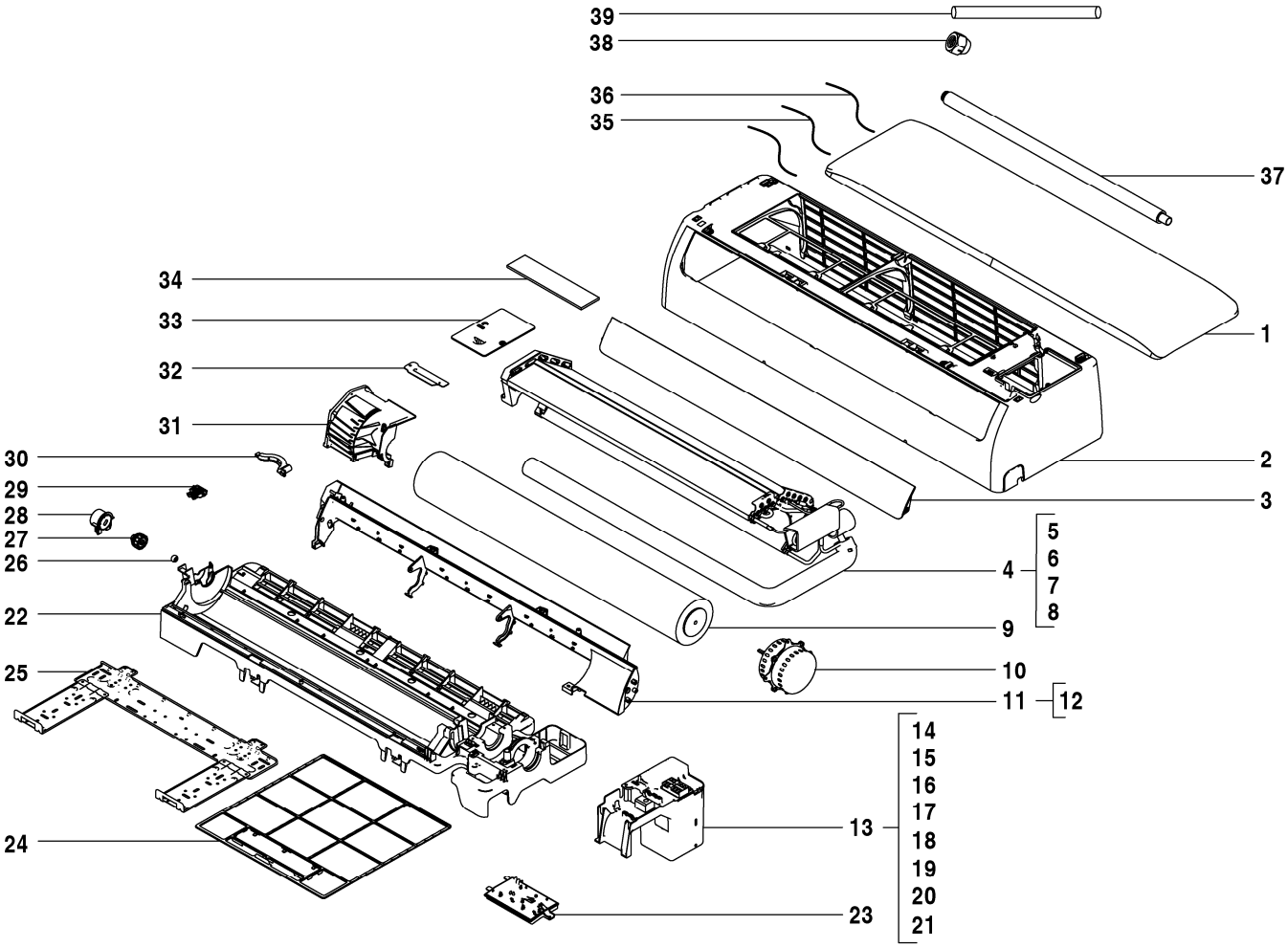

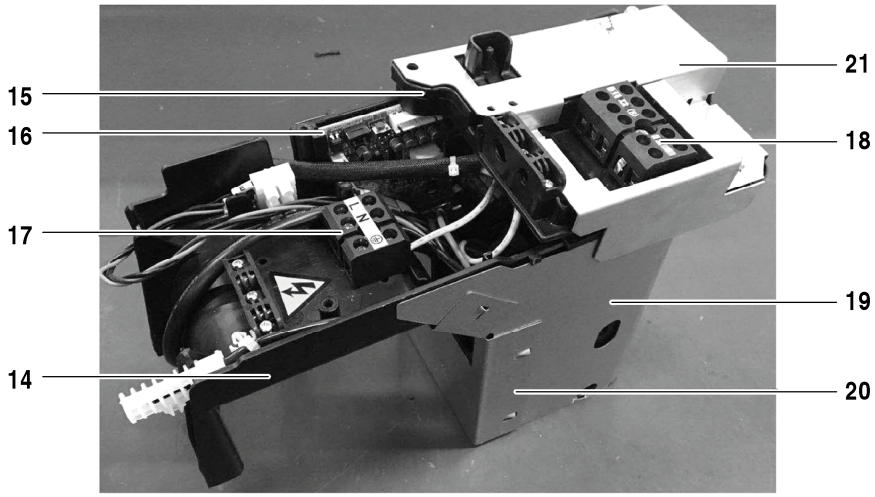

8738894918.aa.RO

Pos	Description	Ordering no.	W 36-1																	Remarks
1	Panel	8 733 501 607	■																	
2	Panel frame assembly	7 739 834 824	■																	
3	Louver	7 739 834 785	■																	
4	Evaporator assembly	8 733 501 458	■																	
5	Pipe temperature sensor	8 733 501 624	■																	
6	Evaporator inlet pipe assembly	7 739 834 717	■																	
7	Evaporator outlet pipe assembly	7 739 834 723	■																	
8	Evaporator assembly	8 733 501 429	■																	
9	Cross flow fan	7 739 834 656	■																	
10	Brushless DC motor	7 739 834 633	■																	
11	Air outlet frame assembly	7 739 834 611	■																	
12	Step motor	7 739 834 851	■																	
13	E-part box with electronic components	8 733 501 396	■																	
14	E-part box housing	7 739 834 682	■																	
15	Cover of E-part box	7 739 834 690	■																	
16	AFW-1 36-56 main board	8 750 501 473	■																	
17	Wiring terminal	7 739 834 881	■																	
18	Wiring terminal	8 733 501 719	■																	
19	Cover of E-part box	8 733 501 315	■																	
20	Cover of E-part box	8 733 501 314	■																	
21	Cover of E-part box	8 733 501 323	■																	
22	Chassis assembly	7 739 834 614	■																	
23	Display board	8 733 501 336	■																	
24	Air filter	7 739 834 748	■																	
25	Mounting plate	7 739 834 779	■																	
26	Bearing	7 739 831 455	■																	
27	Bearing base	7 739 834 627	■																	
28	Bearing base	7 739 834 628	■																	
29	Temperature sensor clip	7 739 834 855	■																	
30	Motor press plate	7 739 834 808	■																	
31	Cover of motor	7 739 834 805	■																	
32	Pipe clamp	7 739 834 831	■																	
33	Cover of E-part box	7 739 834 675	■																	
34	Air filter	7 739 834 763	■																	
35	Pipe temperature sensor	7 739 831 461	■																	
36	Pipe temperature sensor	7 739 834 856	■																	
37	Drainage pipe	7 739 832 011	■																	
38	Copper nut	7 739 836 222	■																	
39	Drainage pipe	8 733 501 338	■																	
	CCB (400mm, SELV adapter)	8 750 501 441	■																	

Spare parts list

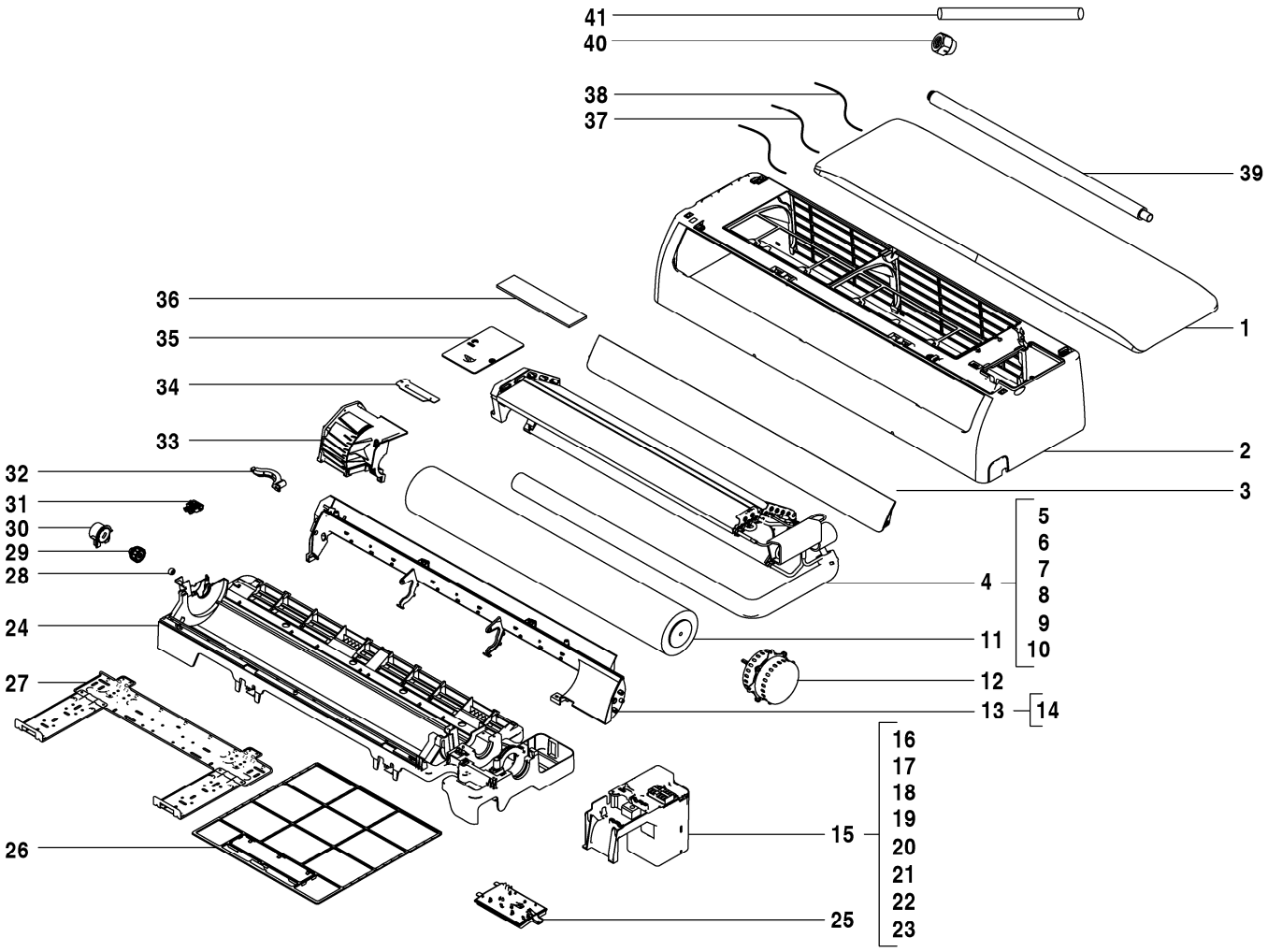

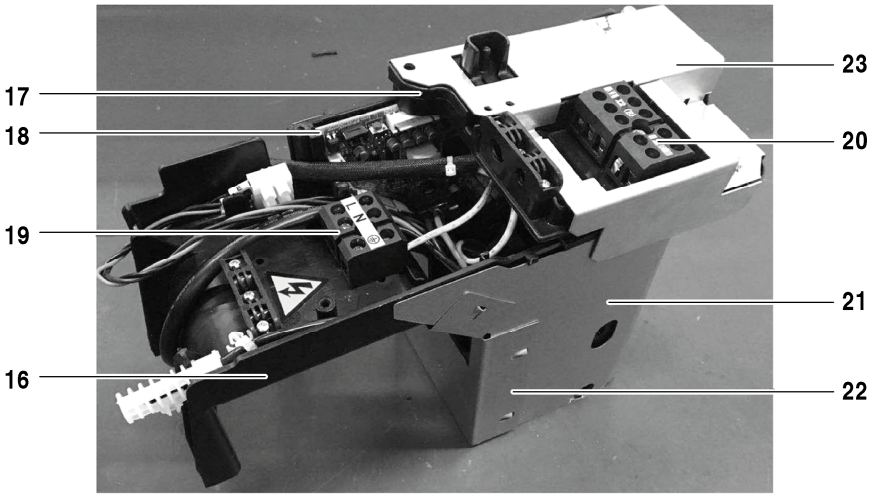

8738894919.ab.RO

AF-W 45-1	7 733 701 484
AF-W 56-1	7 733 701 485

Pos	Description	Ordering no.	W 45-1	W 56-1															Remarks
1	Panel	8 733 501 607	■	■															
2	Panel frame assembly	7 739 834 824	■	■															
3	Louver	7 739 834 785	■	■															
4	Evaporator assembly	8 733 501 459	■																
4	Evaporator assembly	8 733 501 460		■															
5	Pipe temperature sensor	8 733 501 624	■	■															
6	Evaporator inlet pipe assembly	7 739 834 718	■																
6	Evaporator inlet pipe assembly	7 739 834 719		■															
7	Evaporator outlet pipe assembly	7 739 834 724	■																
7	Evaporator outlet pipe assembly	7 739 834 725		■															
8	Evaporator assembly	8 733 501 424	■	■															
9	Evaporator assembly	8 733 501 422	■	■															
10	Evaporator assembly	8 733 501 423	■	■															
11	Cross flow fan	7 739 834 656	■	■															
12	Brushless DC motor	7 739 834 633	■	■															
13	Air outlet frame assembly	7 739 834 611	■	■															
14	Step motor	7 739 834 851	■	■															
15	E-part box with electronic components	8 733 501 396	■	■															
16	E-part box housing	7 739 834 682	■	■															
17	Cover of E-part box	7 739 834 690	■	■															
18	AFW-1 36-56 main board	8 750 501 473	■	■															
19	Wiring terminal	7 739 834 881	■	■															
20	Wiring terminal	8 733 501 719	■	■															
21	Cover of E-part box	8 733 501 315	■	■															
22	Cover of E-part box	8 733 501 314	■	■															
23	Cover of E-part box	8 733 501 323	■	■															
24	Chassis assembly	7 739 834 614	■	■															
25	Display board	8 733 501 336	■	■															
26	Air filter	7 739 834 748	■	■															
27	Mounting plate	7 739 834 779	■	■															
28	Bearing	7 739 831 455	■	■															
29	Bearing base	7 739 834 627	■	■															
30	Bearing base	7 739 834 628	■	■															
31	Temperature sensor clip	7 739 834 855	■	■															
32	Motor press plate	7 739 834 808	■	■															
33	Cover of motor	7 739 834 805	■	■															
34	Pipe clamp	7 739 834 831	■	■															
35	Cover of E-part box	7 739 834 675	■	■															
36	Air filter	7 739 834 763	■	■															
37	Pipe temperature sensor	7 739 831 461	■	■															
38	Pipe temperature sensor	7 739 834 856	■	■															
39	Pipe temperature sensor	7 739 831 461	■																
39	Drainage pipe	7 739 832 011		■															
40	Pipe temperature sensor	7 739 834 856	■																
40	Copper nut	7 739 836 168		■															
41	Drainage pipe	8 733 501 338	■	■															
	CCB (400mm, SELV adapter)	8 750 501 441	■	■															

AF-W 45-1	7 733 701 484
AF-W 56-1	7 733 701 485

Spare parts list

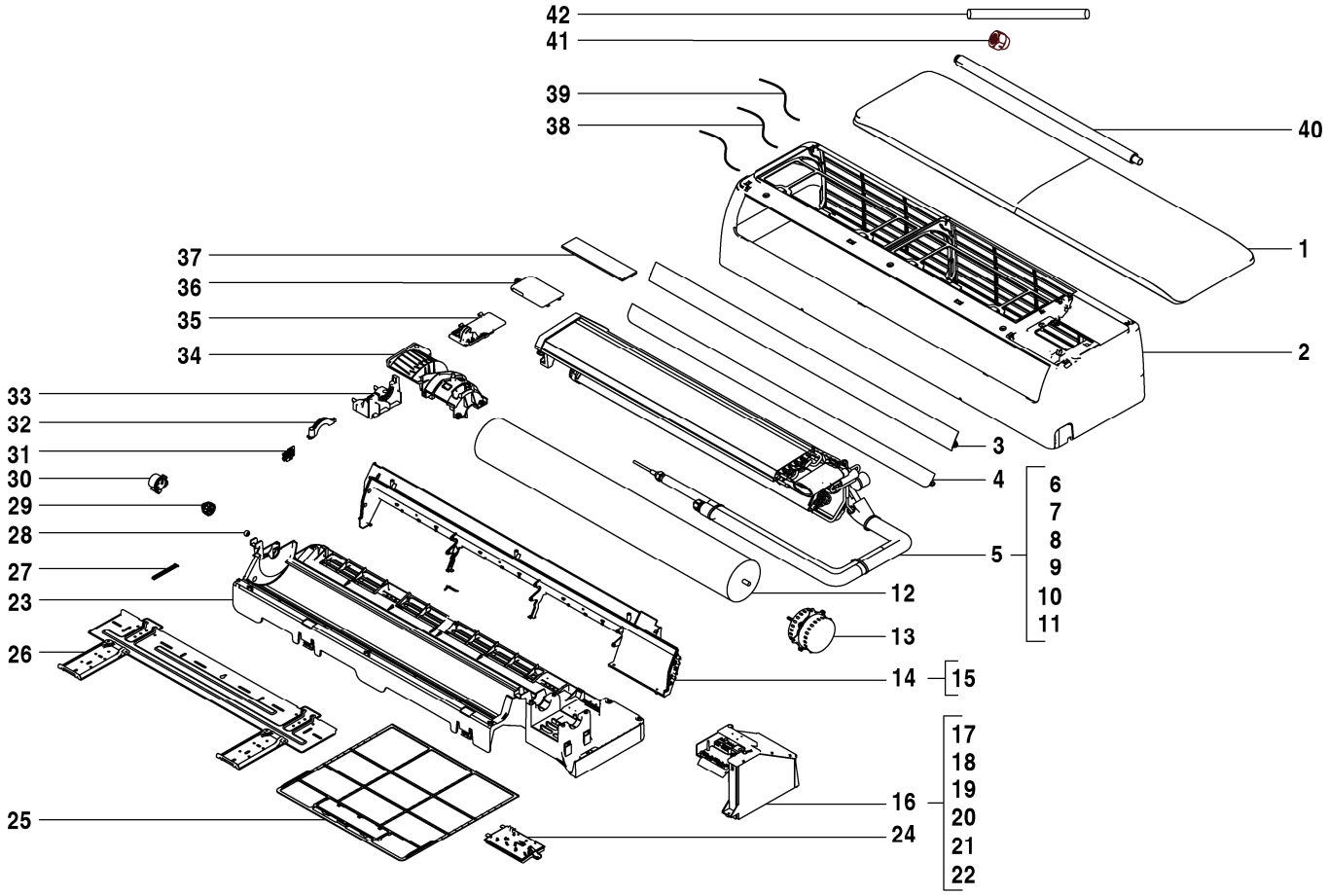

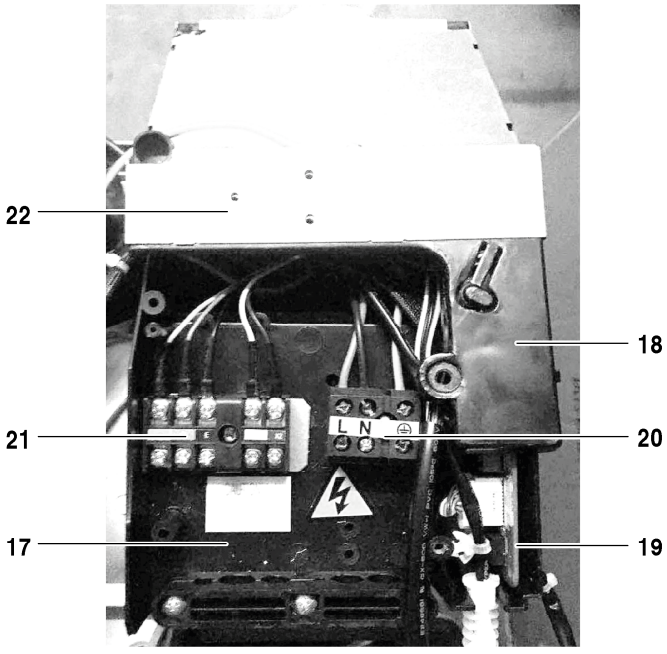

8738894920.aa.RO

AF-W 71-1	7 733 701 486
AF-W 80-1	7 733 701 487
AF-W 90-1	7 733 701 488

Pos	Description	Ordering no.	W 71-1	W 80-1	W 90-1														Remarks
1	Panel	8 733 501 605	■	■	■														
2	Panel frame assembly	7 739 834 825	■	■	■														
3	Louver, up	7 739 834 786	■	■	■														
4	Louver, down	7 739 834 787	■	■	■														
5	Evaporator assembly	8 733 501 461	■	■	■														
6	Pipe temperature sensor	8 733 501 624	■	■	■														
7	Evaporator inlet pipe assembly	7 739 834 720	■	■	■														
8	Evaporator outlet pipe assembly	7 739 834 726	■	■	■														
9	Evaporator assembly	8 733 501 427	■	■	■														
10	Evaporator assembly	8 733 501 426	■	■	■														
11	Evaporator assembly	8 733 501 425	■	■	■														
12	Cross flow fan	7 739 834 657	■	■	■														
13	Brushless DC motor	7 739 834 632	■	■	■														
14	Air outlet frame assembly	7 739 834 612	■	■	■														
15	Step motor	7 739 834 850	■	■	■														
16	E-part box with electronic components	8 733 501 398	■	■	■														
17	E-part box housing	7 739 834 683	■	■	■														
18	Cover of E-part box	7 739 834 691	■	■	■														
19	AFW-1 71-90 main board	8 750 501 472	■	■	■														
20	Wiring terminal	7 739 834 881	■	■	■														
21	Wiring terminal	8 733 501 716	■	■	■														
22	Cover of E-part box	8 733 501 313	■	■	■														
23	Chassis assembly	7 739 834 615	■	■	■														
24	Display board	8 733 501 336	■	■	■														
25	Air filter	7 739 834 749	■	■	■														
26	Mounting plate	7 739 834 780	■	■	■														
27	Supporter	7 739 834 826	■	■	■														
28	Bearing	7 739 831 455	■	■	■														
29	Bearing base	7 739 834 627	■	■	■														
30	Bearing base	7 739 834 628	■	■	■														
31	Temperature sensor clip	7 739 834 855	■	■	■														
32	Motor press plate	7 739 834 808	■	■	■														
33	Mounting base of motor	7 739 834 802	■	■	■														
34	Cover of motor	7 739 834 806	■	■	■														
35	Pipe clamp assembly	7 739 834 830	■	■	■														
36	Cover of E-part box	7 739 834 674	■	■	■														
37	Air filter	7 739 834 763	■	■	■														
38	Pipe temperature sensor	7 739 831 461	■	■	■														
39	Pipe temperature sensor	7 739 834 856	■	■	■														
40	Drainage pipe	7 739 832 011	■	■	■														
41	Copper nut	7 739 836 168	■	■	■														
42	Drainage pipe	8 733 501 338	■	■	■														
	CCB (400mm, SELV adapter)	8 750 501 441	■	■	■														

AF-W 71-1	7 733 701 486
AF-W 80-1	7 733 701 487
AF-W 90-1	7 733 701 488

Bosch Thermotechnik GmbH
Junkersstr. 20-24
D-73249 Wernau / Germany